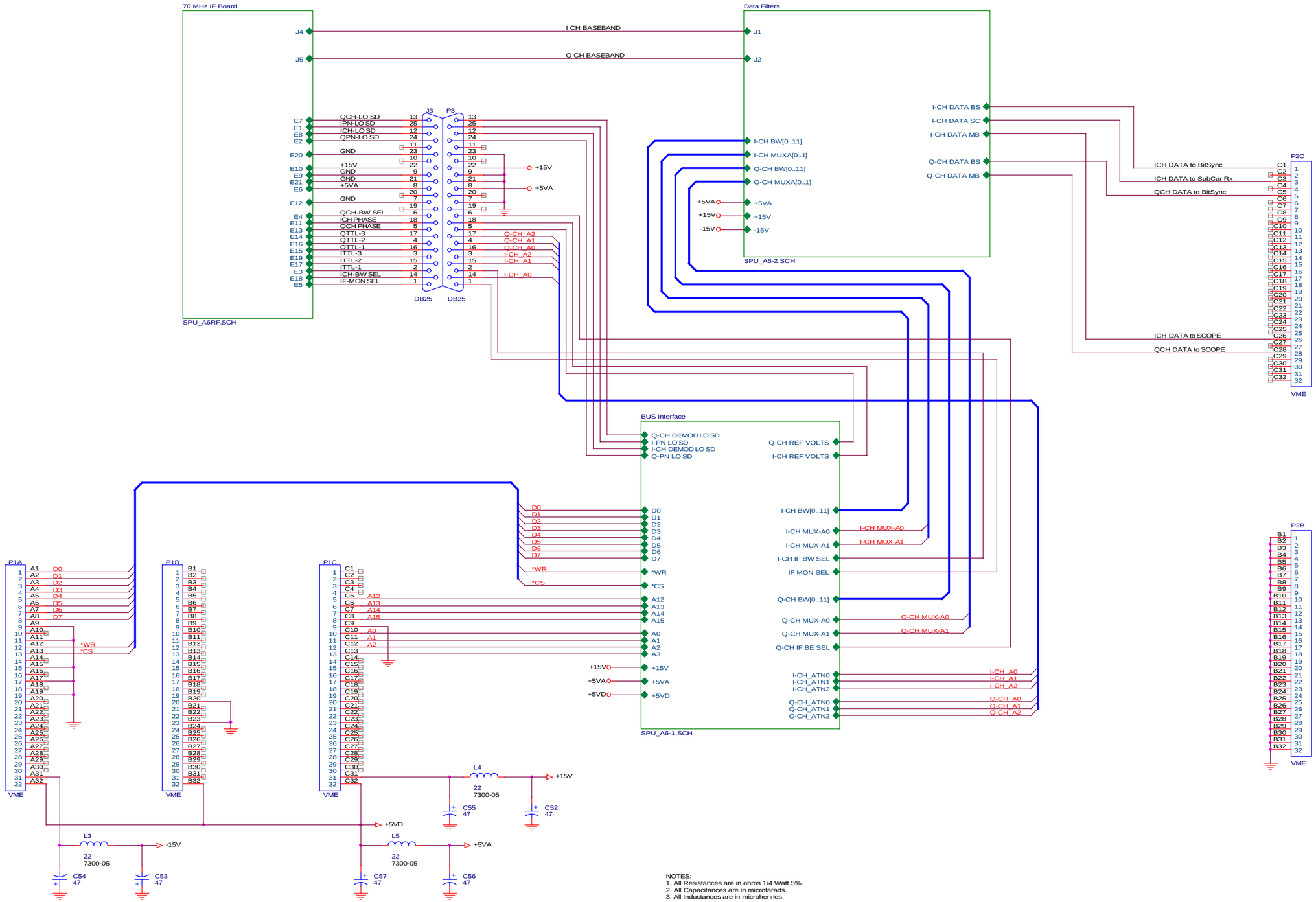


NOTES:
1. All Resistances are in ohms 1/4 Watt 5%.
2. All Capacitances are in microfarads.
3. All Inductances are in microhenries.

Unless specified otherwise

NASA/GSFC - Code 531.2

PROJECT LEAD: Stephen O. Leslie
Preliminary Drawing Approved:
Date Approved:

| Size | Document Number | Rev |
|---|---|---|
| Custom | 1486710 (spu_a6m.sch) | 2 |

Date: Thursday, April 17, 1997 Sheet 1 of 4

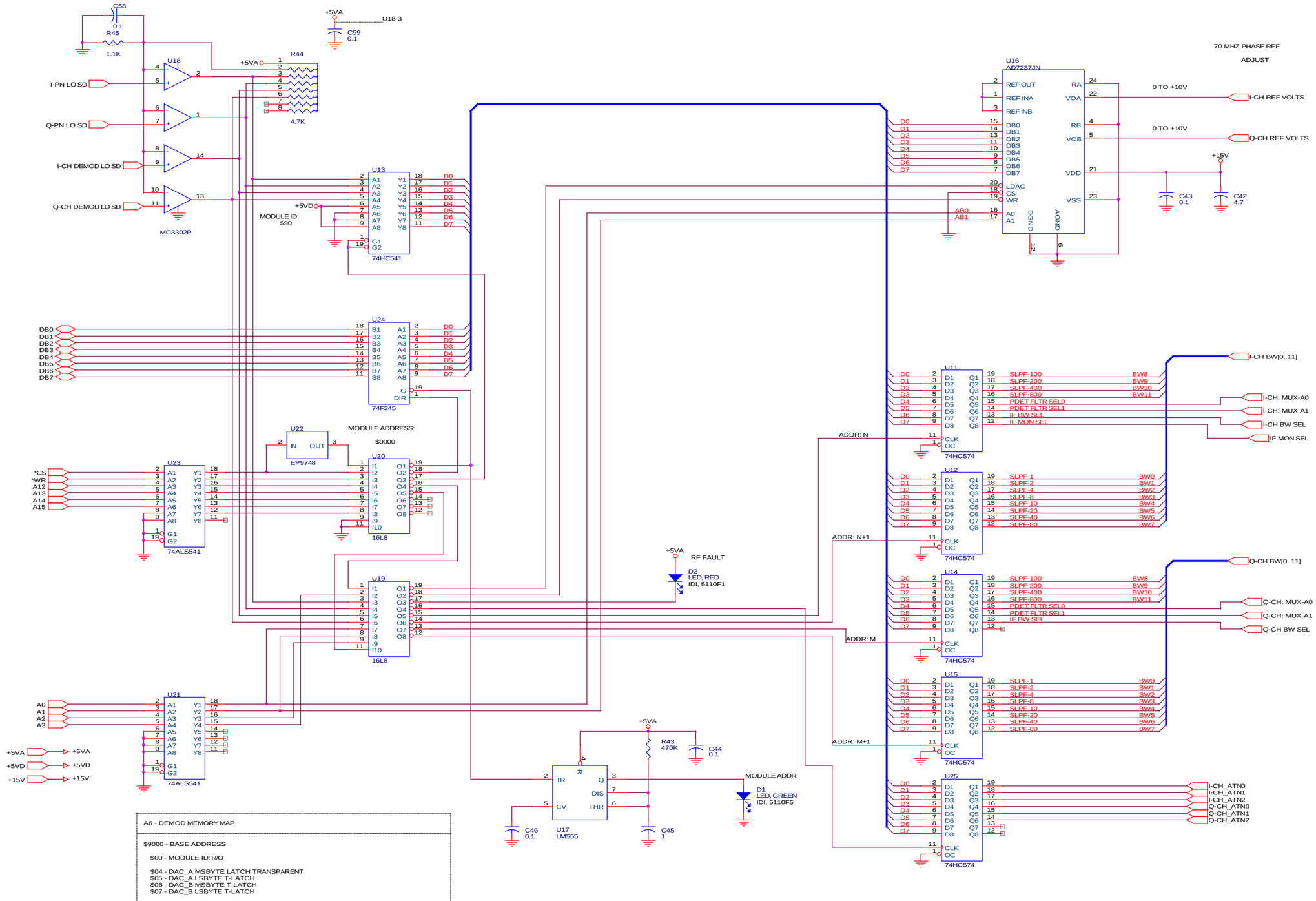


A6 - DEMOD MEMORY MAP

$9000 - BASE ADDRESS

$00 - MODULE ID: R/O

$04 - DAC_A MSBYTE LATCH TRANSPARENT
$05 - DAC_A LSBYTE T-LATCH
$06 - DAC_B MSBYTE T-LATCH
$07 - DAC_B LSBYTE T-LATCH

$05 & $07 - *LDAC: UPDATE DAC_A & DAC_B FROM T-LATCH

$00 - BANDWIDTH SEL I-CH
$01 - BANDWIDTH SEL I-CH
$02 - BANDWIDTH SEL Q-CH
$03 - BANDWIDTH SEL Q-CH
$04 - DEMOD I/Q RATIO SELECT REG

NOTES:
1. All Resistances are in ohms 1/4 Watt 5%.
2. All Capacitances are in microfarads.
3. All Inductances are in microhenries.

Unless specified otherwise

NASA/GSFC CODE 531.2

PROJECT LEAD: Stephen O. Leslie
Preliminary Drawing Approved:
Date Approved:

Title
P/O Data Demodulator - A6

| Size | Document Number | Rev |
|---|---|---|
| Custom | 1486710 (spu_a6-1.sch) | 2 |

Date: Wednesday, April 16, 1997 Sheet 2 of 4

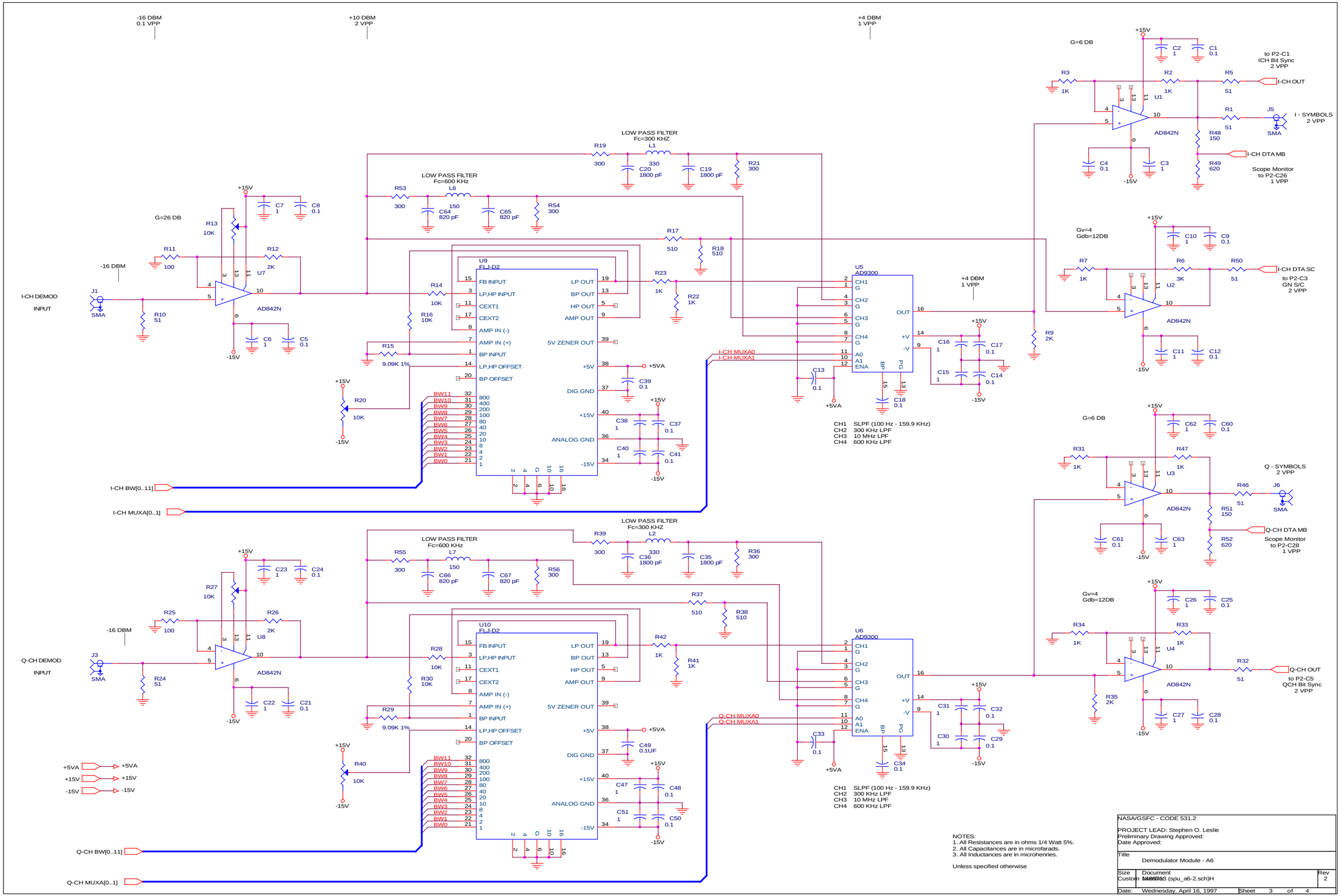
-16 DBM
0.1 VPP
+10 DBM
2 VPP
+4 DBM
1 VPP
G=6 DB
to P2-C1
ICH Bit Sync
2 VPP
I-CH OUT
I - SYMBOLS
2 VPP
I-CH DTA MB
Scope Monitor
to P2-C26
1 VPP
LOW PASS FILTER
Fc=300 KHZ
LOW PASS FILTER
Fc=600 KHz
G=26 DB
I-CH DEMOD
INPUT
AD842N
U9
FLJ-D2
U5
AD9300
Gv=4
Gdb=12DB
I-CH DTA SC
to P2-C3
GN S/C
2 VPP
I-CH MUXA0
I-CH MUXA1
CH1 SLPF (100 Hz - 159.9 KHz)
CH2 300 KHz LPF
CH3 10 MHz LPF
CH4 600 KHz LPF
I-CH BW[0..11]
I-CH MUXA[0..1]
Q - SYMBOLS
2 VPP
Q-CH DTA MB
Scope Monitor
to P2-C28
1 VPP
Q-CH DEMOD
INPUT
U10
FLJ-D2
U6
AD9300
Q-CH MUXA0
Q-CH MUXA1
Q-CH OUT
to P2-C5
QCH Bit Sync
2 VPP
Q-CH BW[0..11]
Q-CH MUXA[0..1]
+5VA
+15V
-15V
NOTES:
1. All Resistances are in ohms 1/4 Watt 5%.
2. All Capacitances are in microfarads.
3. All Inductances are in microhenries.
Unless specified otherwise
NASA/GSFC - CODE 531.2
PROJECT LEAD: Stephen O. Leslie
Preliminary Drawing Approved:
Date Approved:
Title
Demodulator Module - A6
Size
Custom
Document
U48673 (spu_a6-2.sch)H
Rev
2
Date: Wednesday, April 16, 1997
Sheet 3 of 4

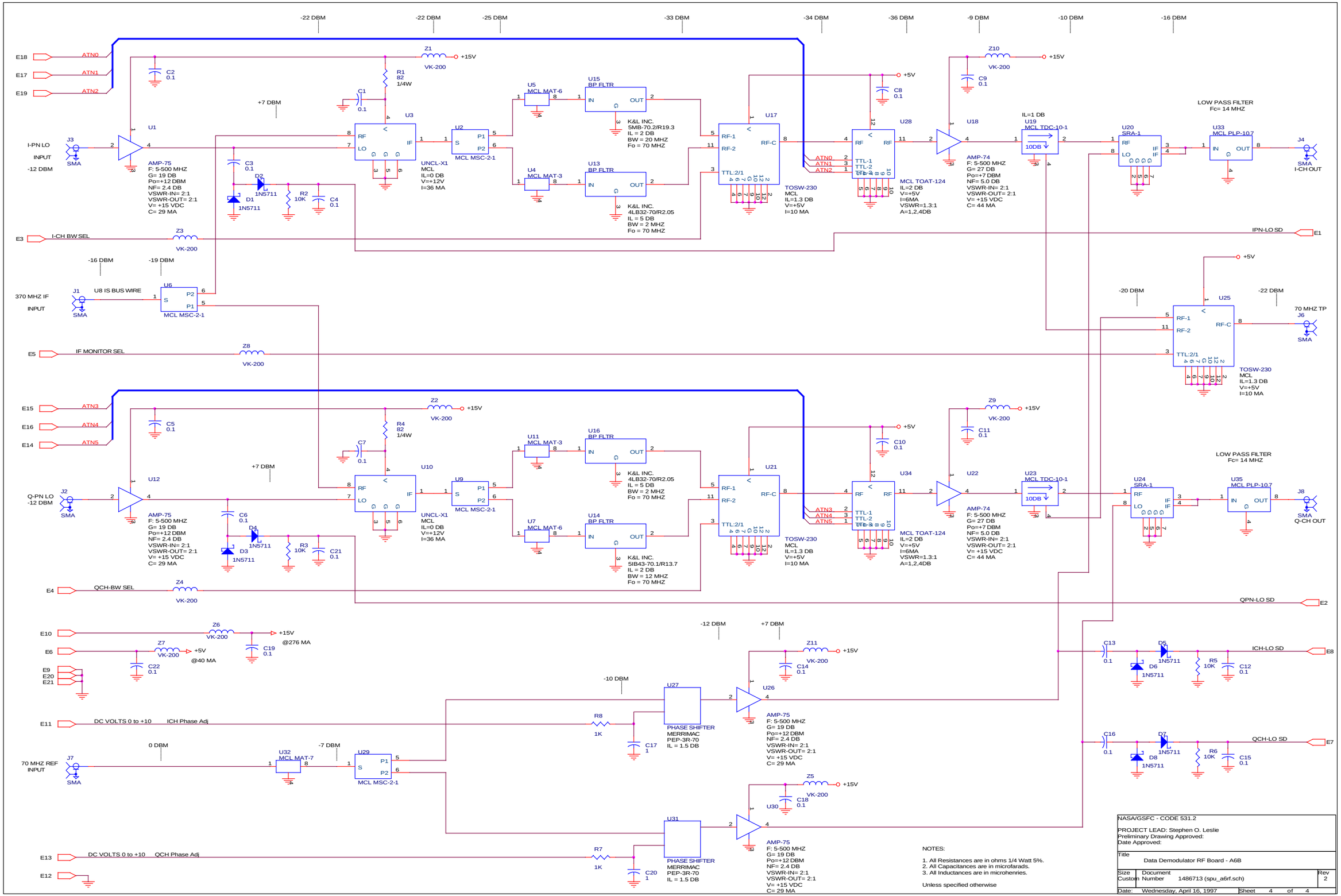
-22 DBM
-22 DBM
-25 DBM
-33 DBM
-34 DBM
-36 DBM
-9 DBM
-10 DBM
-16 DBM
E18
E17
E19
ATN0
ATN1
ATN2
C2 0.1
Z1 VK-200 +15V
R1 82 1/4W
C1 0.1
+7 DBM
U3
U1
I-PN LO INPUT -12 DBM
J3 SMA
AMP-75
F: 5-500 MHZ
G= 19 DB
Po=+12 DBM
NF= 2.4 DB
VSWR-IN= 2:1
VSWR-OUT= 2:1
V= +15 VDC
C= 29 MA
C3 0.1
D2 1N5711
D1 1N5711
R2 10K
C4 0.1
U2 MCL MSC-2-1
UNCL-X1
MCL
IL=0 DB
V=+12V
I=36 MA
U5 MCL MAT-6
U4 MCL MAT-3
U15 BP FLTR
U13 BP FLTR
K&L INC.
5MB-70.2/R19.3
IL = 2 DB
BW = 20 MHZ
Fo = 70 MHZ
K&L INC.
4LB32-70/R2.05
IL = 5 DB
BW = 2 MHZ
Fo = 70 MHZ
U17
TOSW-230
MCL
IL=1.3 DB
V=+5V
I=10 MA
+5V
C8 0.1
U28
MCL TOAT-124
IL=2 DB
V=+5V
I=6MA
VSWR=1.3:1
A=1,2,4DB
Z10 VK-200 +15V
C9 0.1
U18
AMP-74
F: 5-500 MHZ
G= 27 DB
Po=+7 DBM
NF= 5.0 DB
VSWR-IN= 2:1
VSWR-OUT= 2:1
V= +15 VDC
C= 44 MA
IL=1 DB
U19 MCL TDC-10-1
10DB
LOW PASS FILTER
Fc= 14 MHZ
U20 SRA-1
U33 MCL PLP-10.7
J4 SMA I-CH OUT
E3
I-CH BW SEL
Z3 VK-200
IPN-LO SD
E1
-16 DBM
-19 DBM
370 MHZ IF INPUT
J1 SMA
U8 IS BUS WIRE
U6 MCL MSC-2-1
+5V
-20 DBM
-22 DBM
U25
70 MHZ TP
J6 SMA
E5
IF MONITOR SEL
Z8 VK-200
E15
E16
E14
ATN3
ATN4
ATN5
C5 0.1
Z2 VK-200 +15V
R4 82 1/4W
C7 0.1
+7 DBM
U10
U12
Q-PN LO -12 DBM
J2 SMA
AMP-75
F: 5-500 MHZ
G= 19 DB
Po=+12 DBM
NF= 2.4 DB
VSWR-IN= 2:1
VSWR-OUT= 2:1
V= +15 VDC
C= 29 MA
C6 0.1
D4 1N5711
D3 1N5711
R3 10K
C21 0.1
U9 MCL MSC-2-1
UNCL-X1
MCL
IL=0 DB
V=+12V
I=36 MA
U11 MCL MAT-3
U7 MCL MAT-6
U16 BP FLTR
U14 BP FLTR
K&L INC.
4LB32-70/R2.05
IL = 5 DB
BW = 2 MHZ
Fo = 70 MHZ
K&L INC.
5IB43-70.1/R13.7
IL = 2 DB
BW = 12 MHZ
Fo = 70 MHZ
U21
TOSW-230
MCL
IL=1.3 DB
V=+5V
I=10 MA
+5V
C10 0.1
U34
MCL TOAT-124
IL=2 DB
V=+5V
I=6MA
VSWR=1.3:1
A=1,2,4DB
Z9 VK-200 +15V
C11 0.1
U22
AMP-74
F: 5-500 MHZ
G= 27 DB
Po=+7 DBM
NF= 5.0 DB
VSWR-IN= 2:1
VSWR-OUT= 2:1
V= +15 VDC
C= 44 MA
U23 MCL TDC-10-1
10DB
LOW PASS FILTER
Fc= 14 MHZ
U24 SRA-1
U35 MCL PLP-10.7
J8 SMA Q-CH OUT
E4
QCH-BW SEL
Z4 VK-200
QPN-LO SD
E2
E10
E6
E9
E20
E21
Z6 VK-200 +15V
@276 MA
Z7 VK-200 +5V
@40 MA
C19 0.1
C22 0.1
-12 DBM
+7 DBM
Z11 VK-200 +15V
C14 0.1
C13 0.1
D5 1N5711
D6 1N5711
R5 10K
C12 0.1
ICH-LO SD
E8
-10 DBM
U27
U26
E11
DC VOLTS 0 to +10
ICH Phase Adj
R8 1K
C17 1
PHASE SHIFTER
MERRIMAC
PEP-3R-70
IL = 1.5 DB
AMP-75
F: 5-500 MHZ
G= 19 DB
Po=+12 DBM
NF= 2.4 DB
VSWR-IN= 2:1
VSWR-OUT= 2:1
V= +15 VDC
C= 29 MA
C16 0.1
D7 1N5711
D8 1N5711
R6 10K
C15 0.1
QCH-LO SD
E7
0 DBM
-7 DBM
70 MHZ REF INPUT
J7 SMA
U32 MCL MAT-7
U29 MCL MSC-2-1
Z5 VK-200 +15V
C18 0.1
U30
U31
E13
DC VOLTS 0 to +10
QCH Phase Adj
R7 1K
C20 1
PHASE SHIFTER
MERRIMAC
PEP-3R-70
IL = 1.5 DB
AMP-75
F: 5-500 MHZ
G= 19 DB
Po=+12 DBM
NF= 2.4 DB
VSWR-IN= 2:1
VSWR-OUT= 2:1
V= +15 VDC
C= 29 MA
E12
NOTES:
1. All Resistances are in ohms 1/4 Watt 5%.
2. All Capacitances are in microfarads.
3. All Inductances are in microhenries.
Unless specified otherwise
NASA/GSFC - CODE 531.2
PROJECT LEAD: Stephen O. Leslie
Preliminary Drawing Approved:
Date Approved:
Title
Data Demodulator RF Board - A6B
Size Custom
Document Number 1486713 (spu_a6rf.sch)
Rev 2
Date: Wednesday, April 16, 1997
Sheet 4 of 4