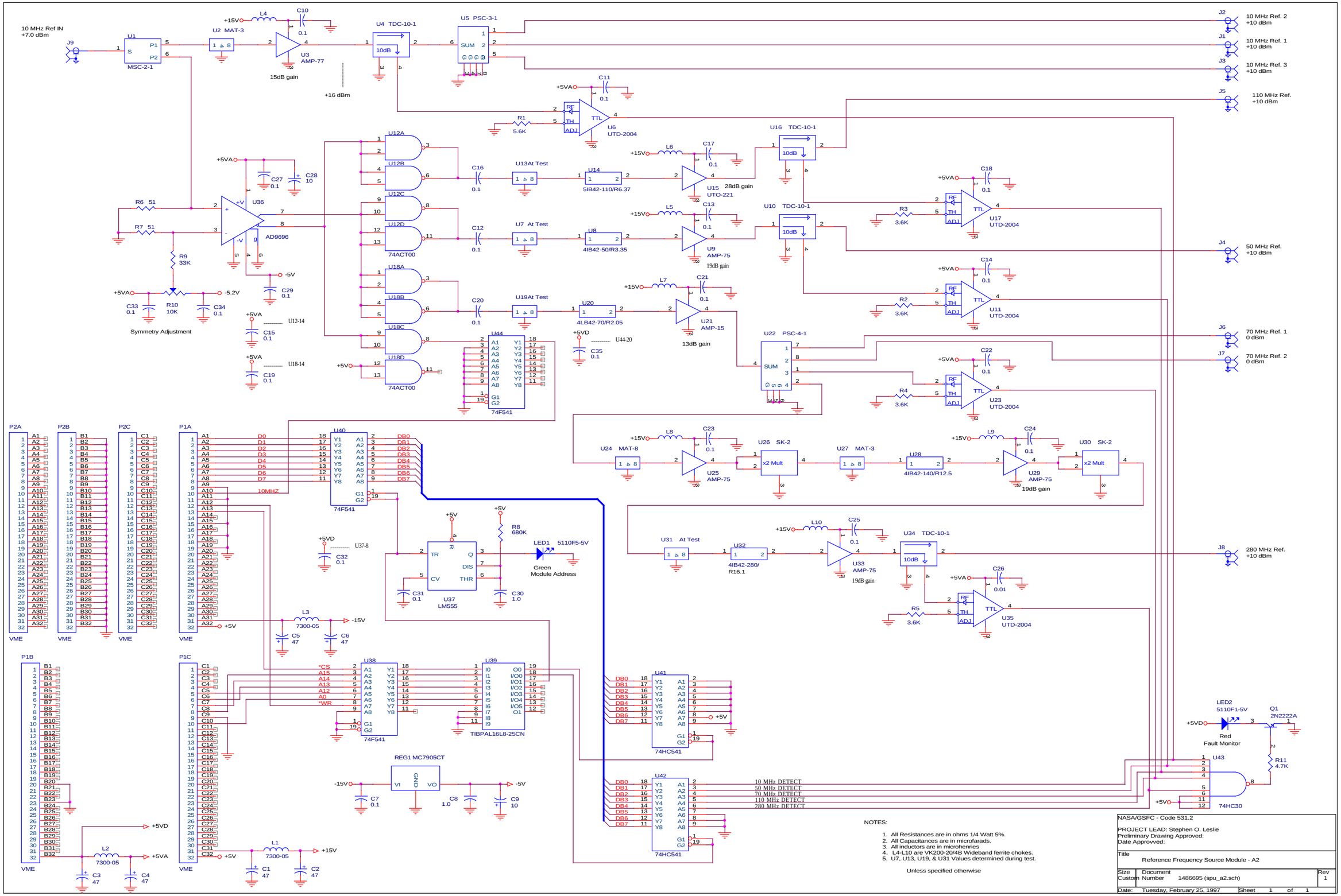

NOTES:

1. All Resistances are in ohms 1/4 Watt 5%.
2. All Capacitances are in microfarads.
3. All inductors are in microhenries
4. L4-L10 are VK200-20/4B Wideband ferrite chokes.
5. U7, U13, U19, & U31 Values determined during test.

Unless specified otherwise

NASA/GSFC - Code 531.2

PROJECT LEAD: Stephen O. Leslie
Preliminary Drawing Approved:
Date Approvved:

Title
Reference Frequency Source Module - A2

Size	Document Number	Rev
Custom	1486695 (spu_a2.sch)	1

Date: Tuesday, February 25, 1997 Sheet 1 of 1