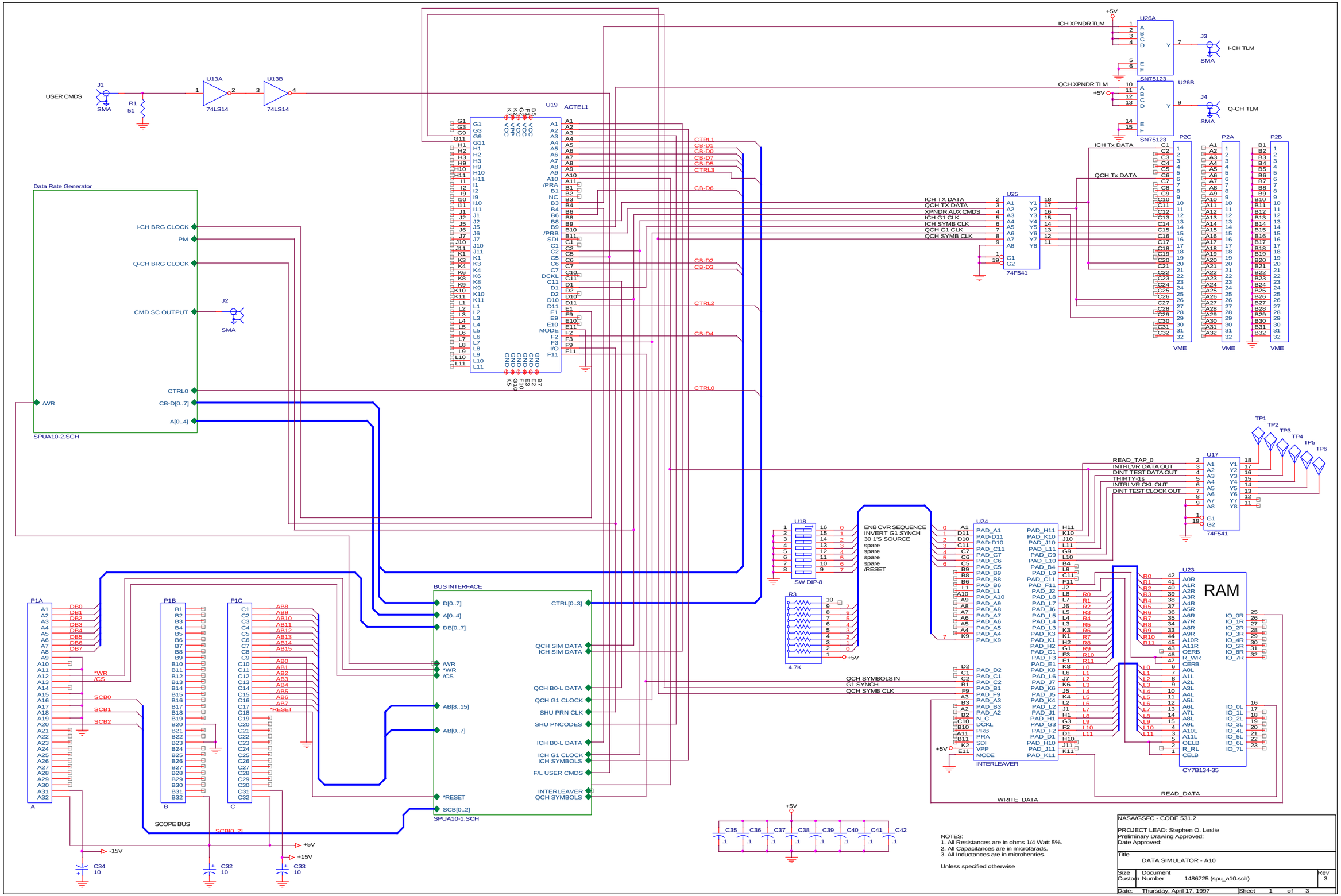

NOTES:
1. All Resistances are in ohms 1/4 Watt 5%.
2. All Capacitances are in microfarads.
3. All Inductances are in microhenries.

Unless specified otherwise

NASA/GSFC - CODE 531.2

PROJECT LEAD: Stephen O. Leslie
Preliminary Drawing Approved:
Date Approved:

Title
DATA SIMULATOR - A10

Size	Document Number	Rev
Custom	1486725 (spu_a10.sch)	3

Date: Thursday, April 17, 1997 Sheet 1 of 3

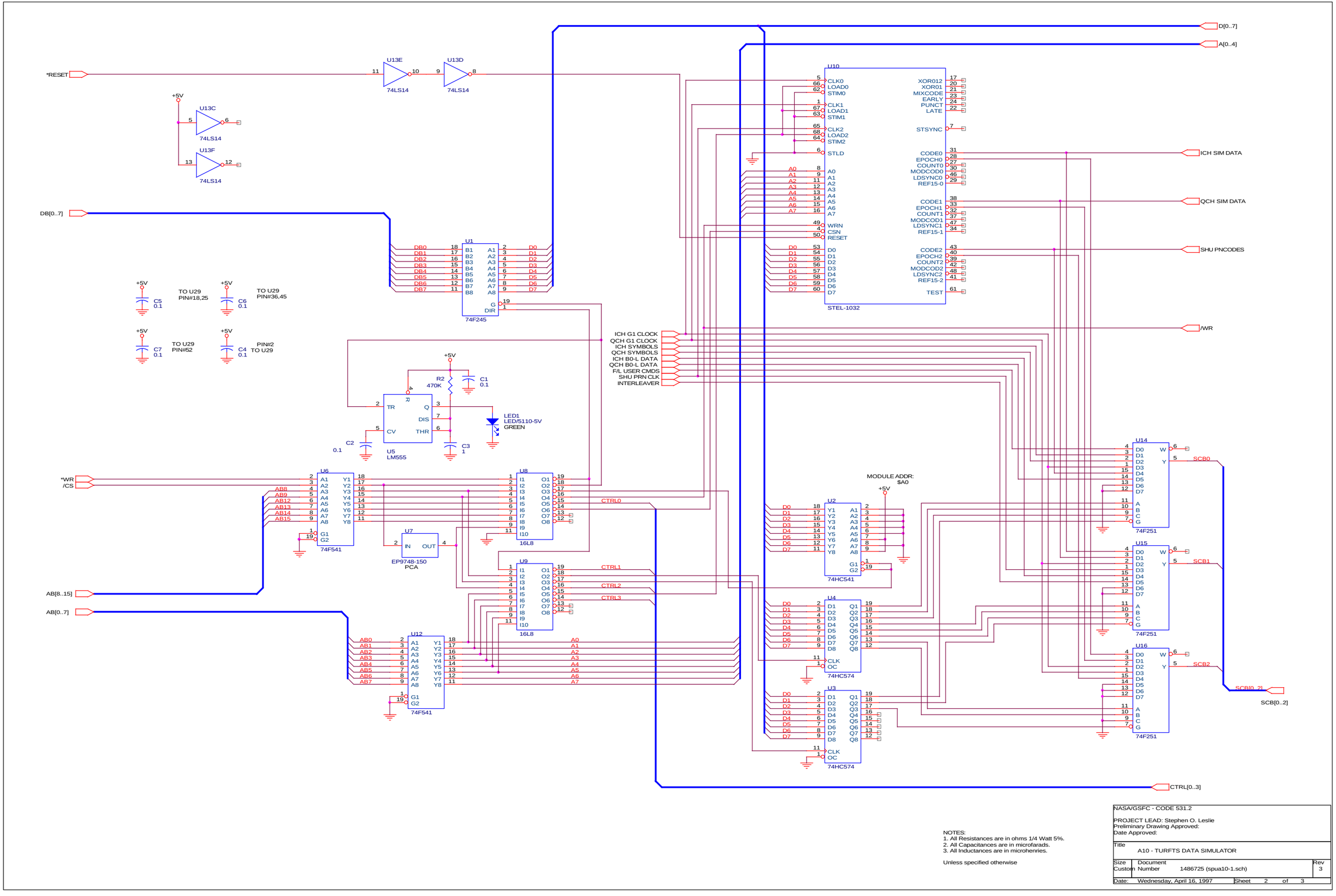

NOTES:
1. All Resistances are in ohms 1/4 Watt 5%.
2. All Capacitances are in microfarads.
3. All Inductances are in microhenries.

Unless specified otherwise

NASA/GSFC - CODE 531.2

PROJECT LEAD: Stephen O. Leslie
Preliminary Drawing Approved:
Date Approved:

Title
A10 - TURFTS DATA SIMULATOR

Size	Document Number	Rev
Custom	1486725 (spua10-1.sch)	3

Date: Wednesday, April 16, 1997 Sheet 2 of 3

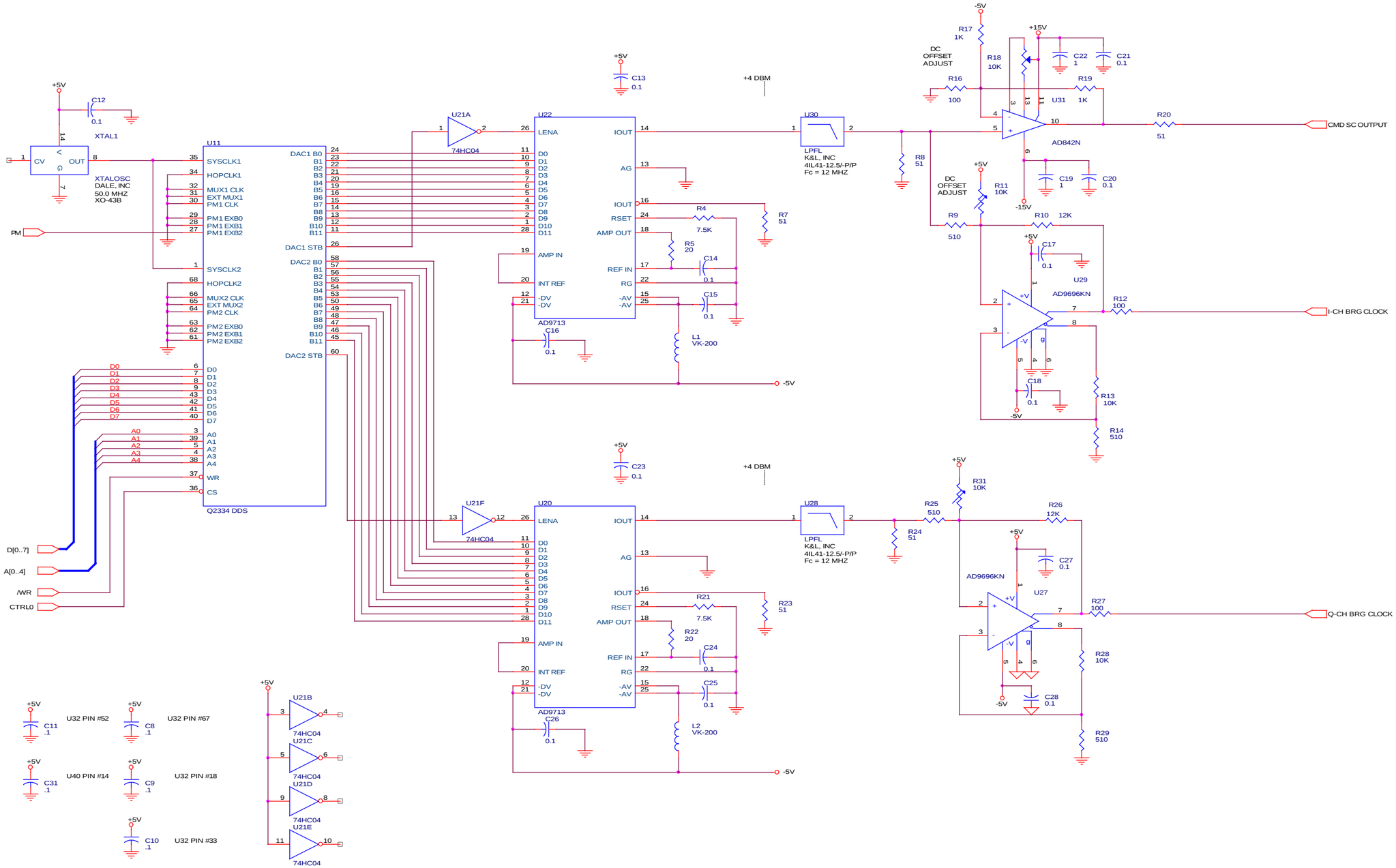
XTAL1
XTALOSC
DALE, INC
50.0 MHZ
XO-43B
U11
Q2334 DDS
U21A
74HC04
U22
AD9713
LPFL
K&L, INC
4IL41-12.5/-P/P
Fc = 12 MHZ
+4 DBM
U30
U31
AD842N
U29
AD9696KN
CMD SC OUTPUT
I-CH BRG CLOCK
U21F
U20
U28
U27
Q-CH BRG CLOCK
U32 PIN #52
U32 PIN #67
U40 PIN #14
U32 PIN #18
U32 PIN #33
U21B
U21C
U21D
U21E
REG1
MC7905
NOTES:
1. All Resistances are in ohms 1/4 Watt 5%.
2. All Capacitances are in microfarads.
3. All Inductances are in microhenries.
Unless specified otherwise
NASA/GSFC - CODE 531.2
PROJECT LEAD: Stephen O. Leslie
Preliminary Drawing Approved:
Date Approved:
Title
P/O Data Simulator - A10
Size Custom
Document Number 1486725 (spua10-2.sch)
Rev 3
Date: Wednesday, April 16, 1997
Sheet 3 of 3