TURFTS - TDRSS User RF Test Set

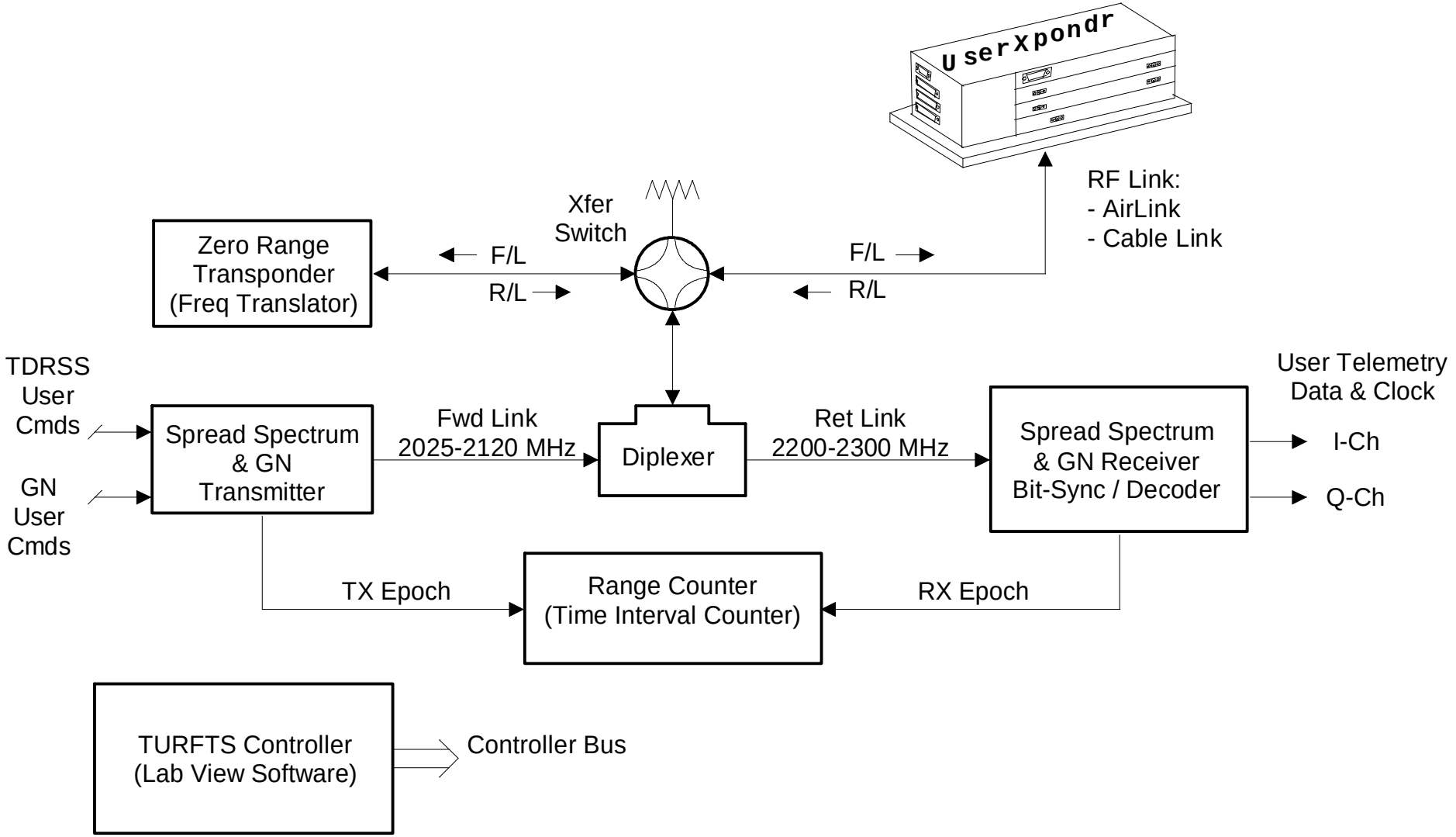

TURFTS - Transmitter & Translator

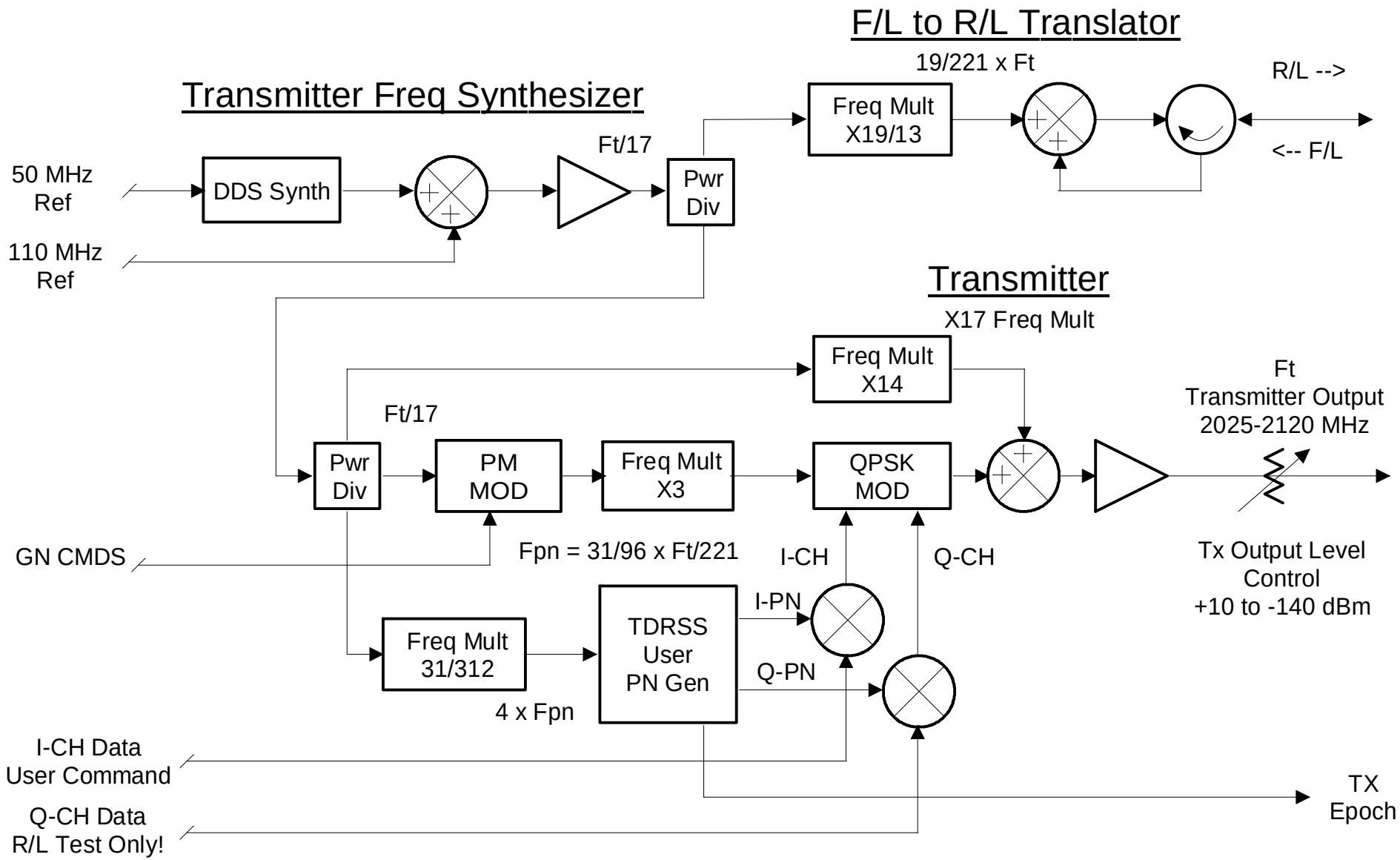

Transmitter Frequency Synthesizer

Support of the TONS Test Requirements

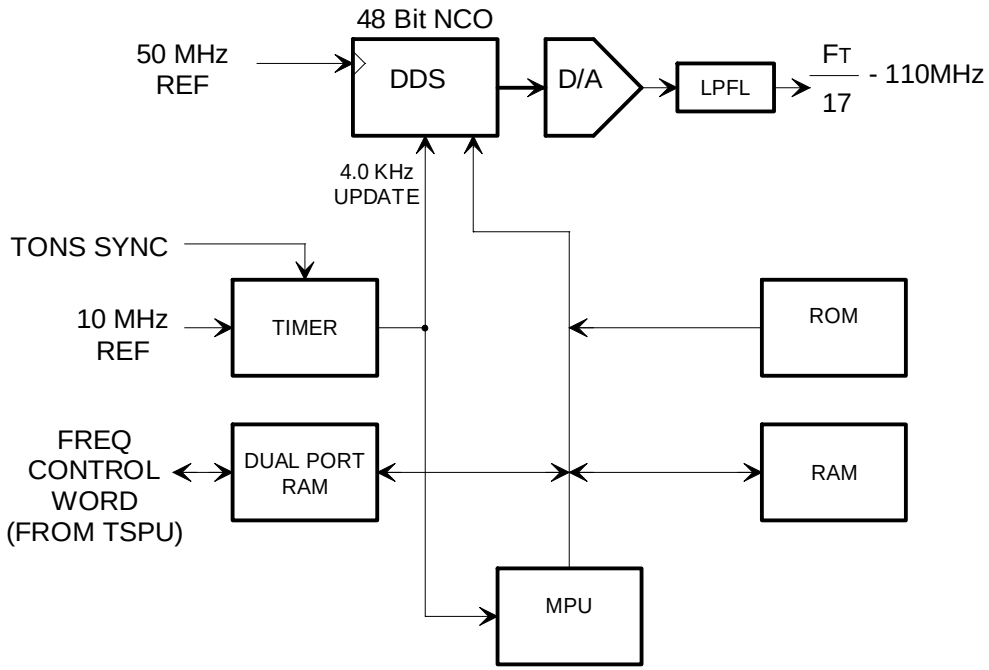

- Transmitter has a dedicated controller for frequency control.

- Sweep pattern frequency vectors for up to 100 minutes are stored in the transmitter controller's RAM.

- Frequency resolution at S-Band is ~ 3 uHz.

TURFTS - Receiver

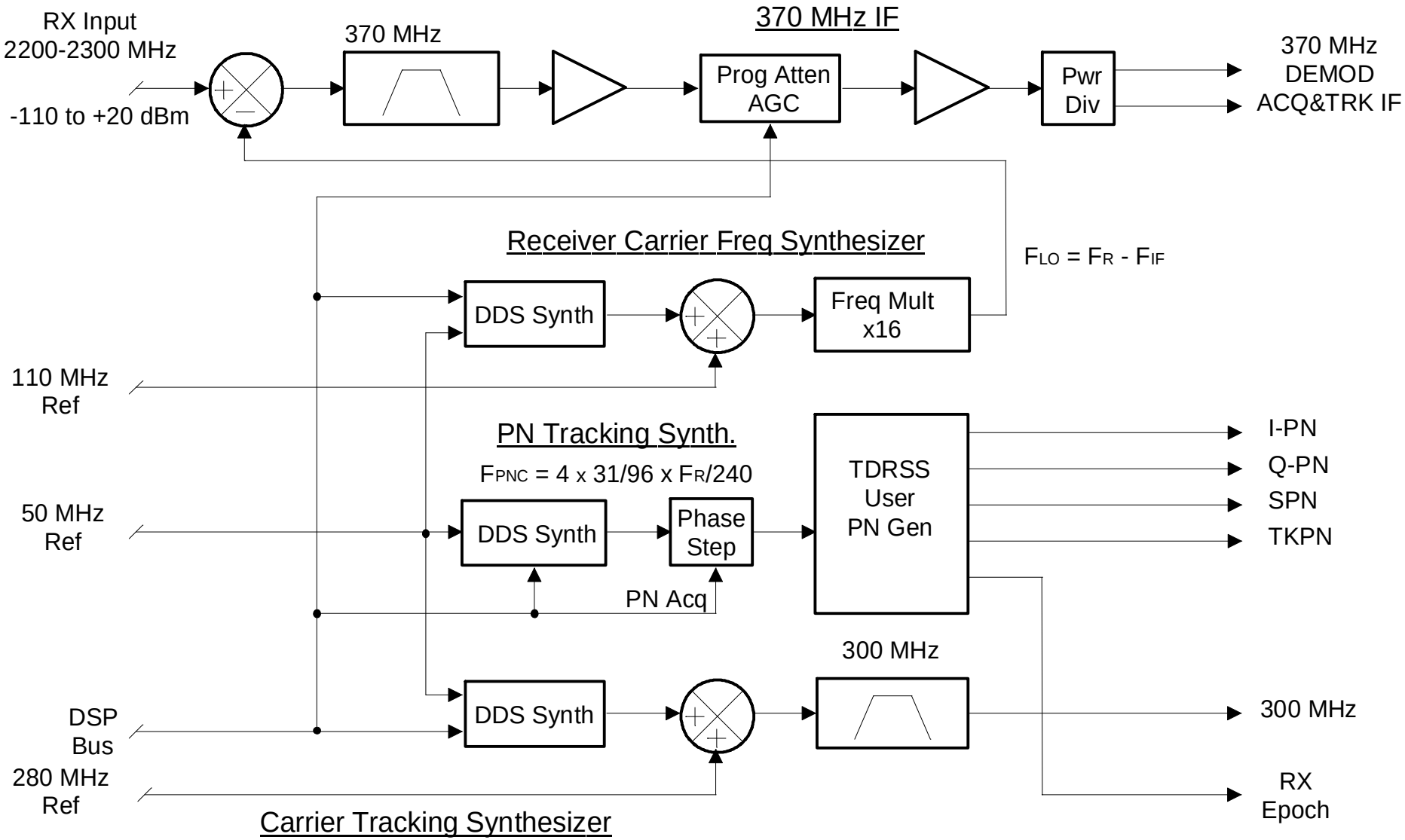

Carrier Demodulator

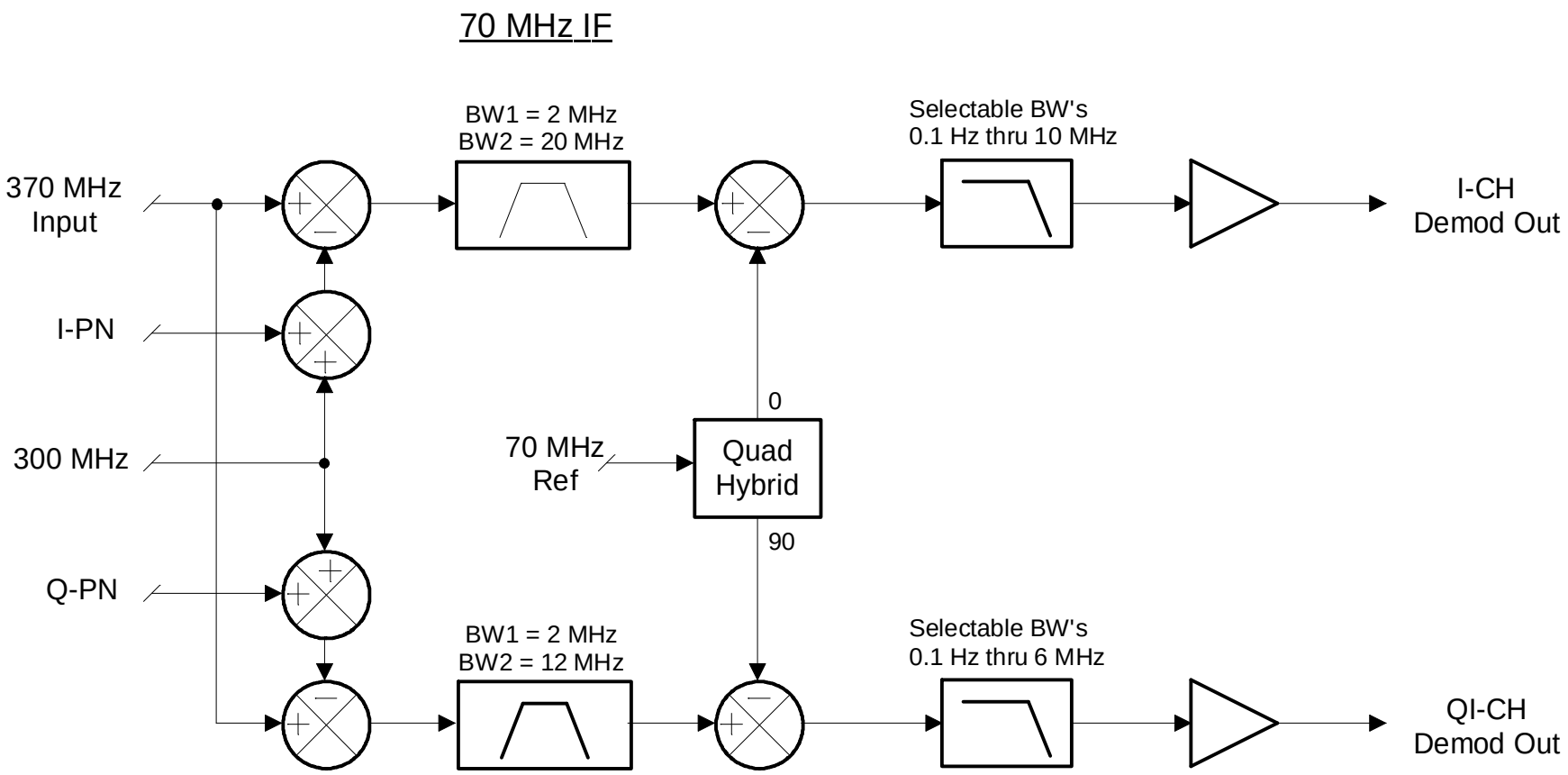

Acq / Tracking IF & DSP

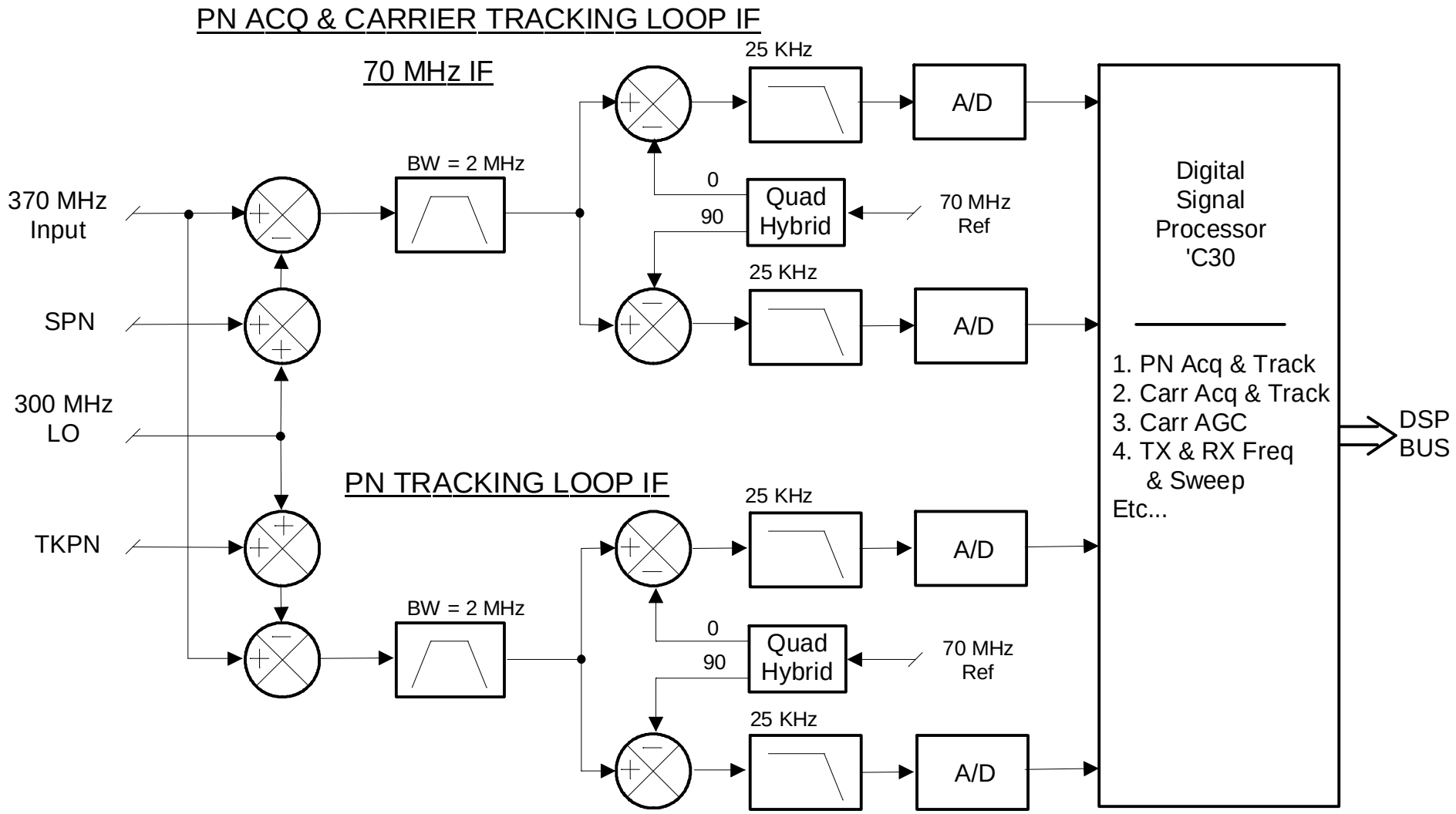

TURFTS Clock Recovery & Data Decoder

DG1, Modes 1, 2 & 3

I-Channel

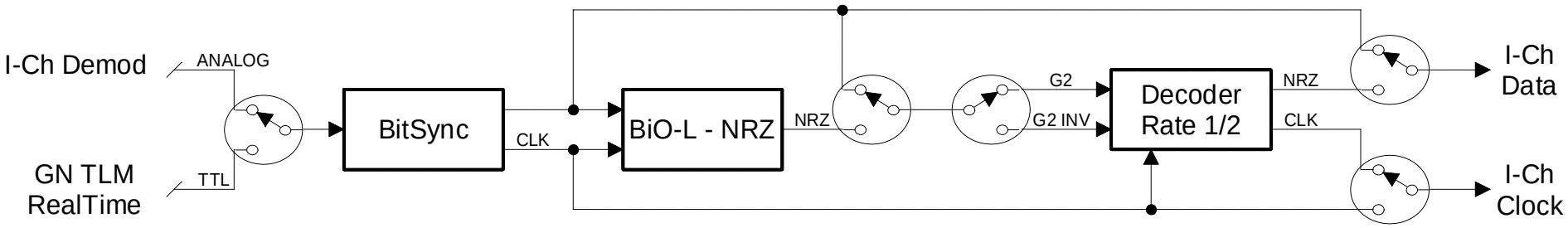

Q-Channel

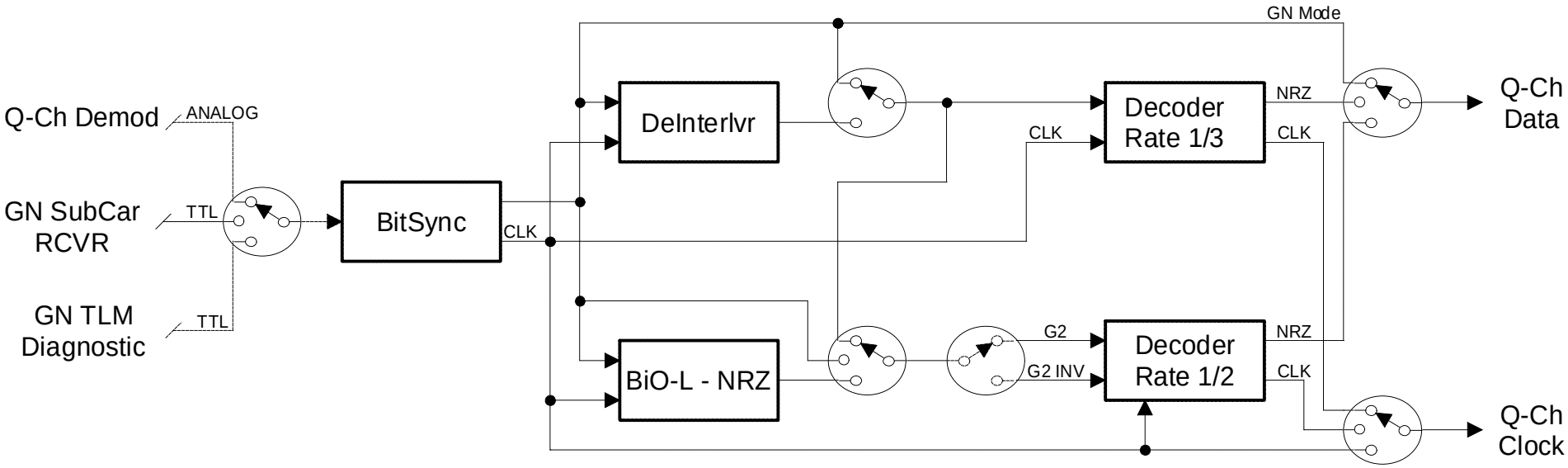

TURFTS Data Simulator

DG1, Modes 1, 2 & 3

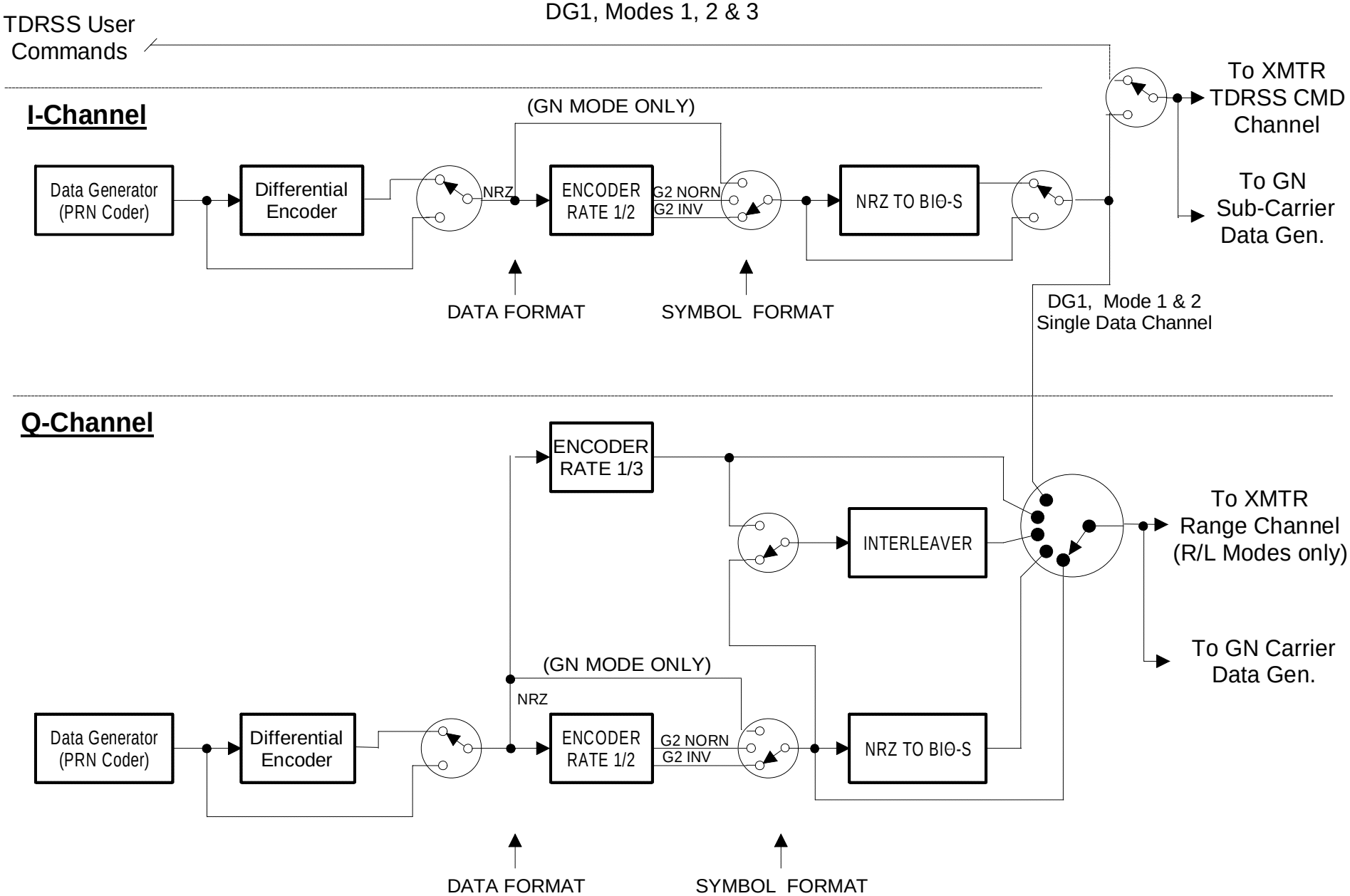

GN DATA SOURCE

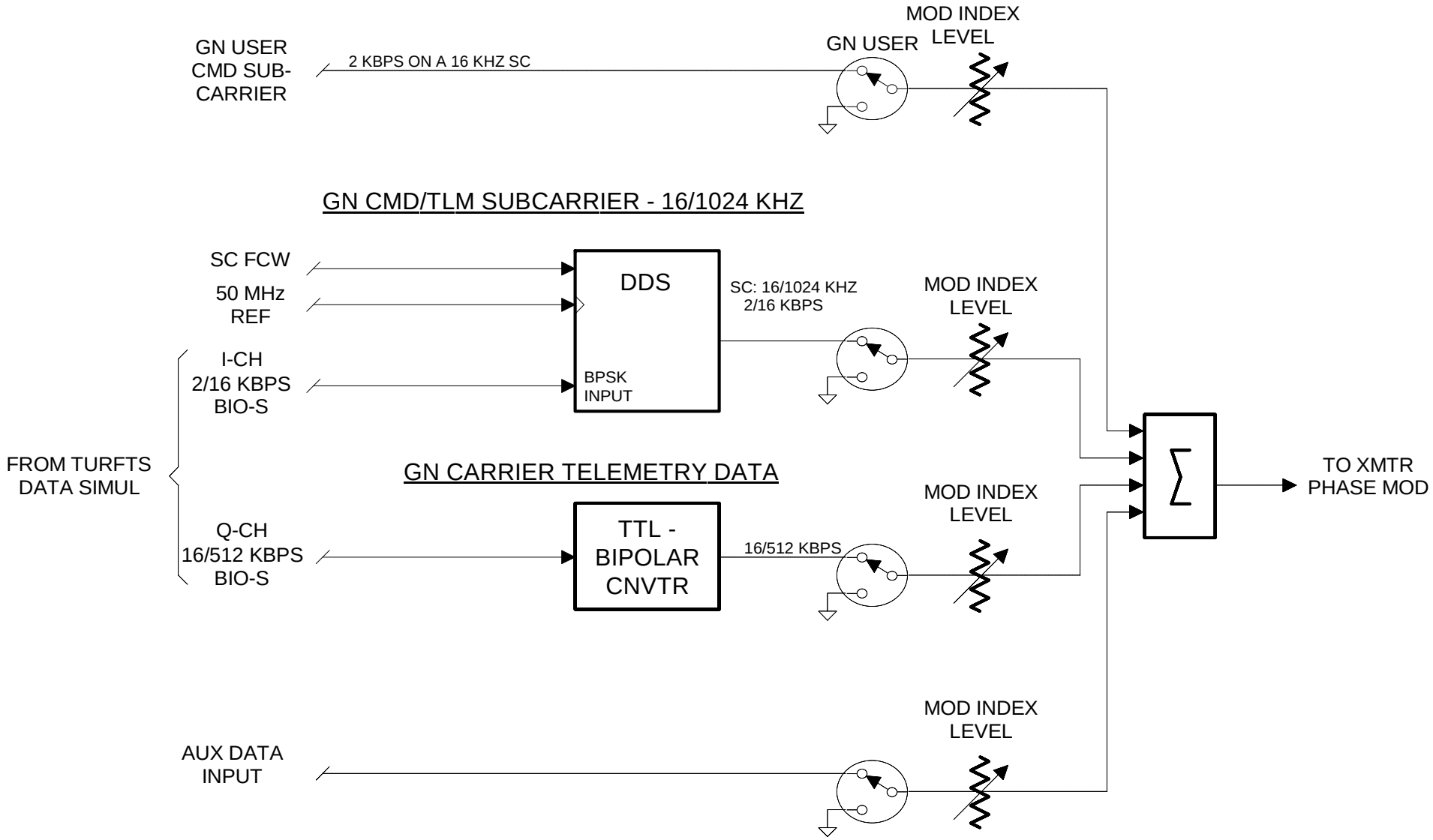

1.024 MHz SubCarrier Demodulator

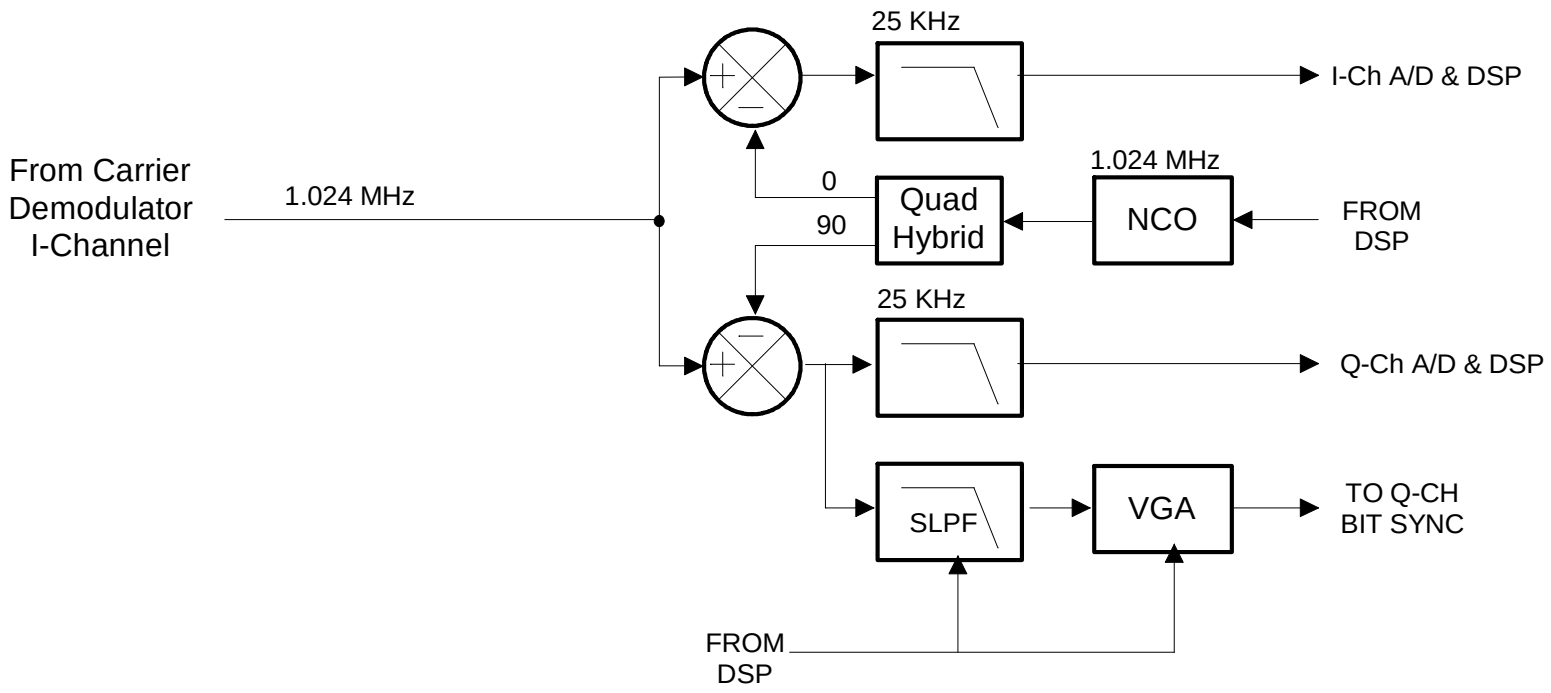

TURFTS USER INTERFACE
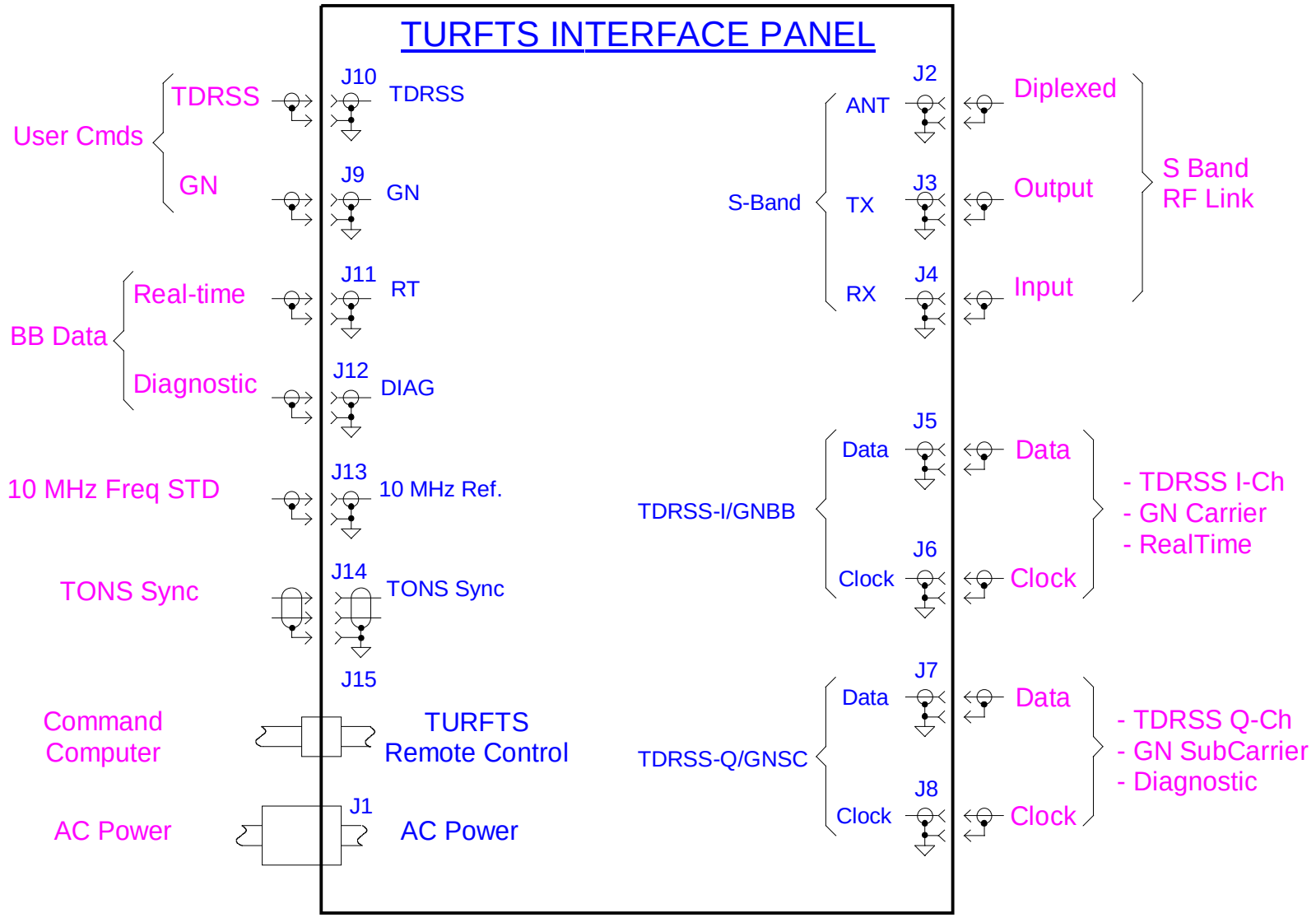
Block Diagram