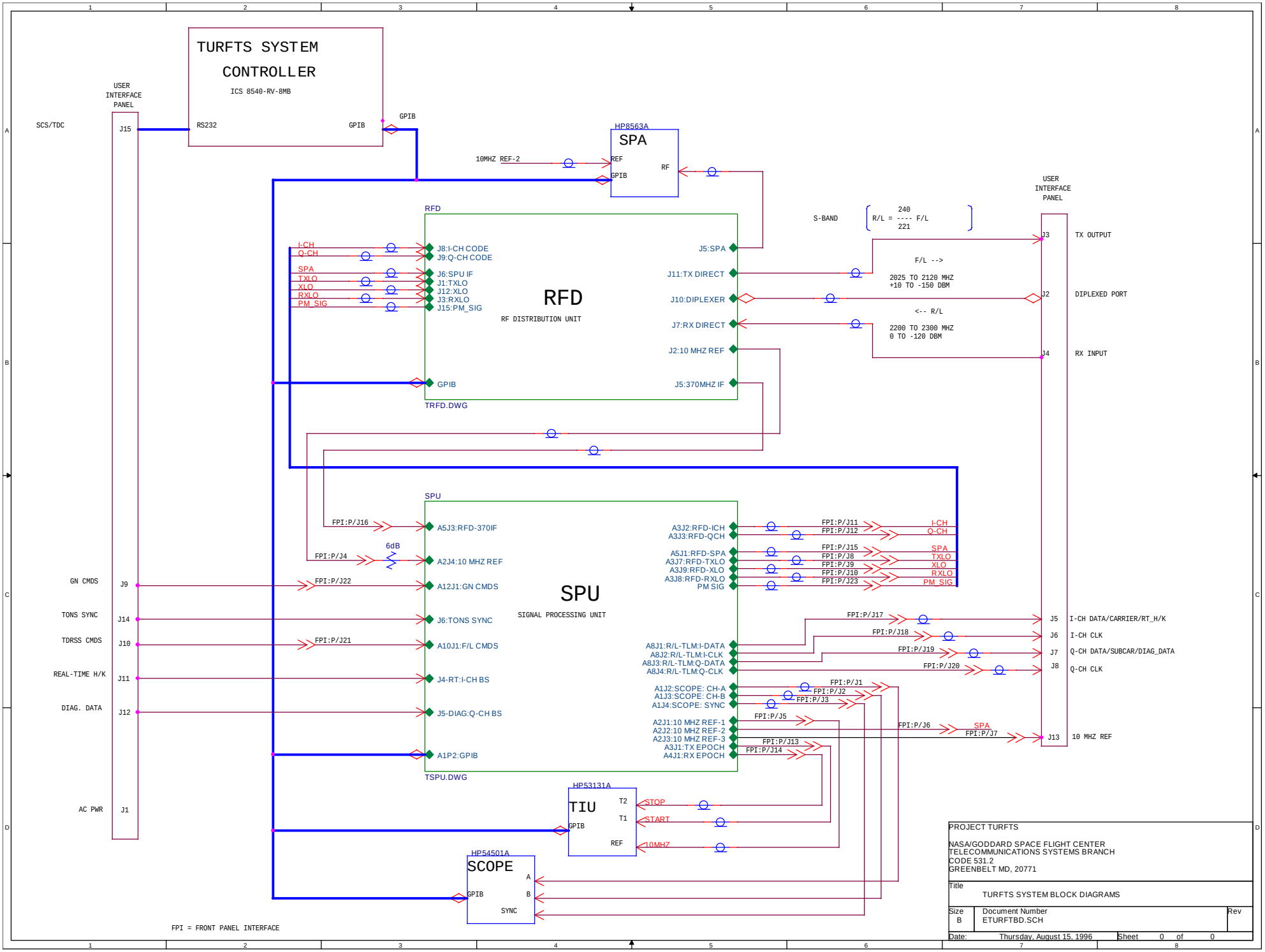
TURFTS SYSTEM CONTROLLER
ICS 8540-RV-8MB
RS232
GPIB
SCS/TDC
USER INTERFACE PANEL
J15
HP8563A
SPA
10MHZ REF-2
REF
GPIB
RF
RFD
RF DISTRIBUTION UNIT
I-CH
Q-CH
SPA
TXLO
XLO
RXLO
PM_SIG
J8:I-CH CODE
J9:Q-CH CODE
J6:SPU IF
J1:TXLO
J12:XLO
J3:RXLO
J15:PM_SIG
GPIB
J5:SPA
J11:TX DIRECT
J10:DIPLEXER
J7:RX DIRECT
J2:10 MHZ REF
J5:370MHZ IF
TRFD.DWG
S-BAND
240
R/L = ---- F/L
221
F/L -->
2025 TO 2120 MHZ
+10 TO -150 DBM
<-- R/L
2200 TO 2300 MHZ
0 TO -120 DBM
USER INTERFACE PANEL
J3
TX OUTPUT
J2
DIPLEXED PORT
J4
RX INPUT
SPU
SIGNAL PROCESSING UNIT
FPI:P/J16
A5J3:RFD-370IF
FPI:P/J4
6dB
A2J4:10 MHZ REF
FPI:P/J22
A12J1:GN CMDS
J6:TONS SYNC
FPI:P/J21
A10J1:F/L CMDS
J4-RT:I-CH BS
J5-DIAG:Q-CH BS
A1P2:GPIB
TSPU.DWG
A3J2:RFD-ICH
A3J3:RFD-QCH
A5J1:RFD-SPA
A3J7:RFD-TXLO
A3J9:RFD-XLO
A3J8:RFD-RXLO
PM SIG
FPI:P/J11
FPI:P/J12
FPI:P/J15
FPI:P/J8
FPI:P/J9
FPI:P/J10
FPI:P/J23
I-CH
Q-CH
SPA
TXLO
XLO
RXLO
PM_SIG
A8J1:R/L-TLM:I-DATA
A8J2:R/L-TLM:I-CLK
A8J3:R/L-TLM:Q-DATA
A8J4:R/L-TLM:Q-CLK
FPI:P/J17
FPI:P/J18
FPI:P/J19
FPI:P/J20
J5
I-CH DATA/CARRIER/RT_H/K
J6
I-CH CLK
J7
Q-CH DATA/SUBCAR/DIAG_DATA
J8
Q-CH CLK
A1J2:SCOPE: CH-A
A1J3:SCOPE: CH-B
A1J4:SCOPE: SYNC
FPI:P/J1
FPI:P/J2
FPI:P/J3
A2J1:10 MHZ REF-1
A2J2:10 MHZ REF-2
A2J3:10 MHZ REF-3
A3J1:TX EPOCH
A4J1:RX EPOCH
FPI:P/J5
FPI:P/J6
FPI:P/J7
FPI:P/J13
FPI:P/J14
SPA
J13
10 MHZ REF
GN CMDS
J9
TONS SYNC
J14
TDRSS CMDS
J10
REAL-TIME H/K
J11
DIAG. DATA
J12
AC PWR
J1
HP53131A
TIU
T2
T1
GPIB
REF
STOP
START
10MHZ
HP54501A
SCOPE
A
B
GPIB
SYNC
FPI = FRONT PANEL INTERFACE
PROJECT TURFTS
NASA/GODDARD SPACE FLIGHT CENTER
TELECOMMUNICATIONS SYSTEMS BRANCH
CODE 531.2
GREENBELT MD, 20771
Title
TURFTS SYSTEM BLOCK DIAGRAMS
Size
B
Document Number
ETURFTBD.SCH
Rev
Date:
Thursday, August 15, 1996
Sheet
0
of
0

RF DISTRIBUTION UNIT

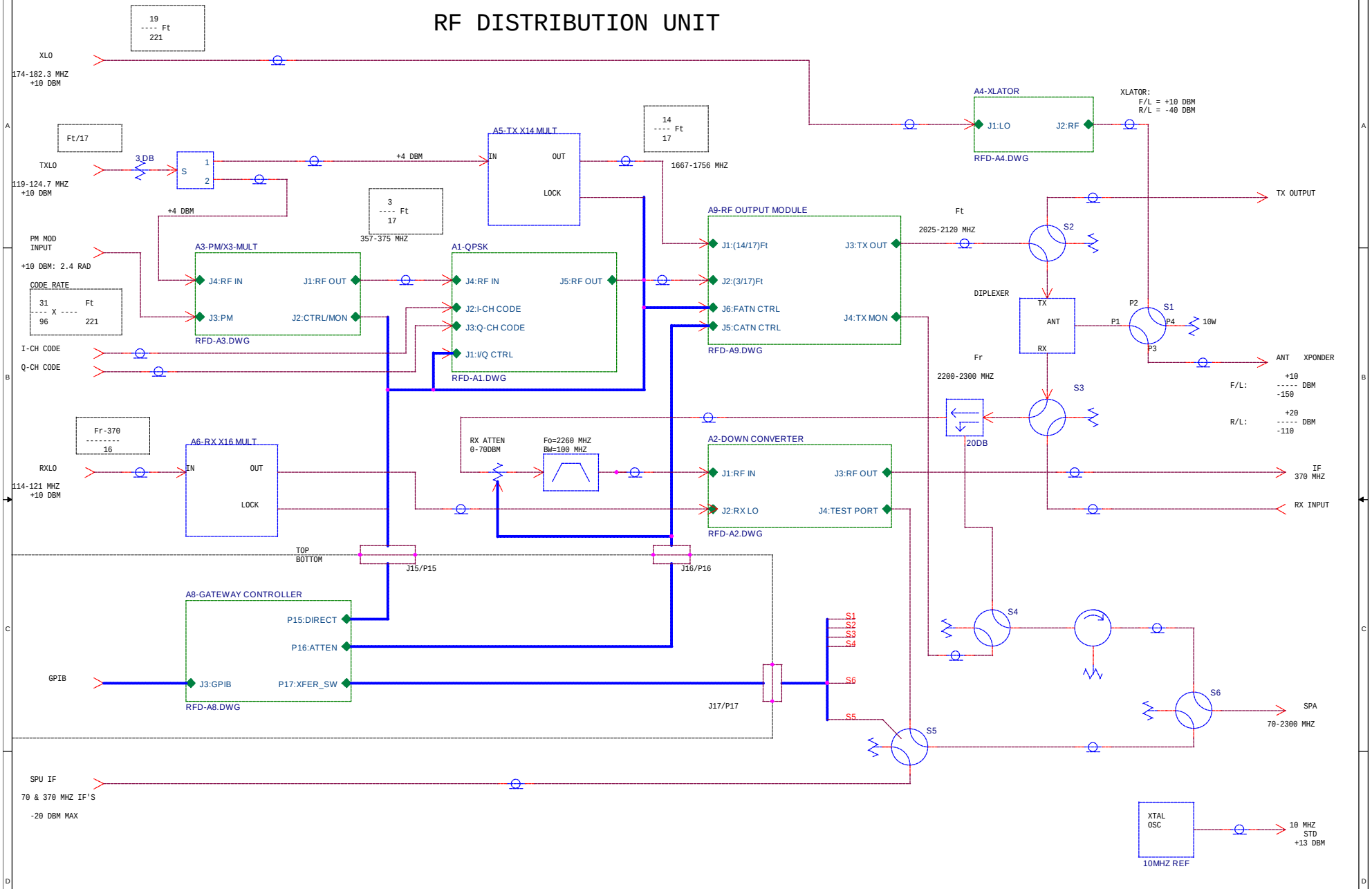

NASA/GSFC - CODE 531.2		
Title: TURFTS RF DISTRIBUTION UNIT BLOCK DIAGRAM		
Size: B	Document Number: TRFD.DWG	Rev: 1
Date: Thursday, August 15, 1996	Sheet 0 of 0	

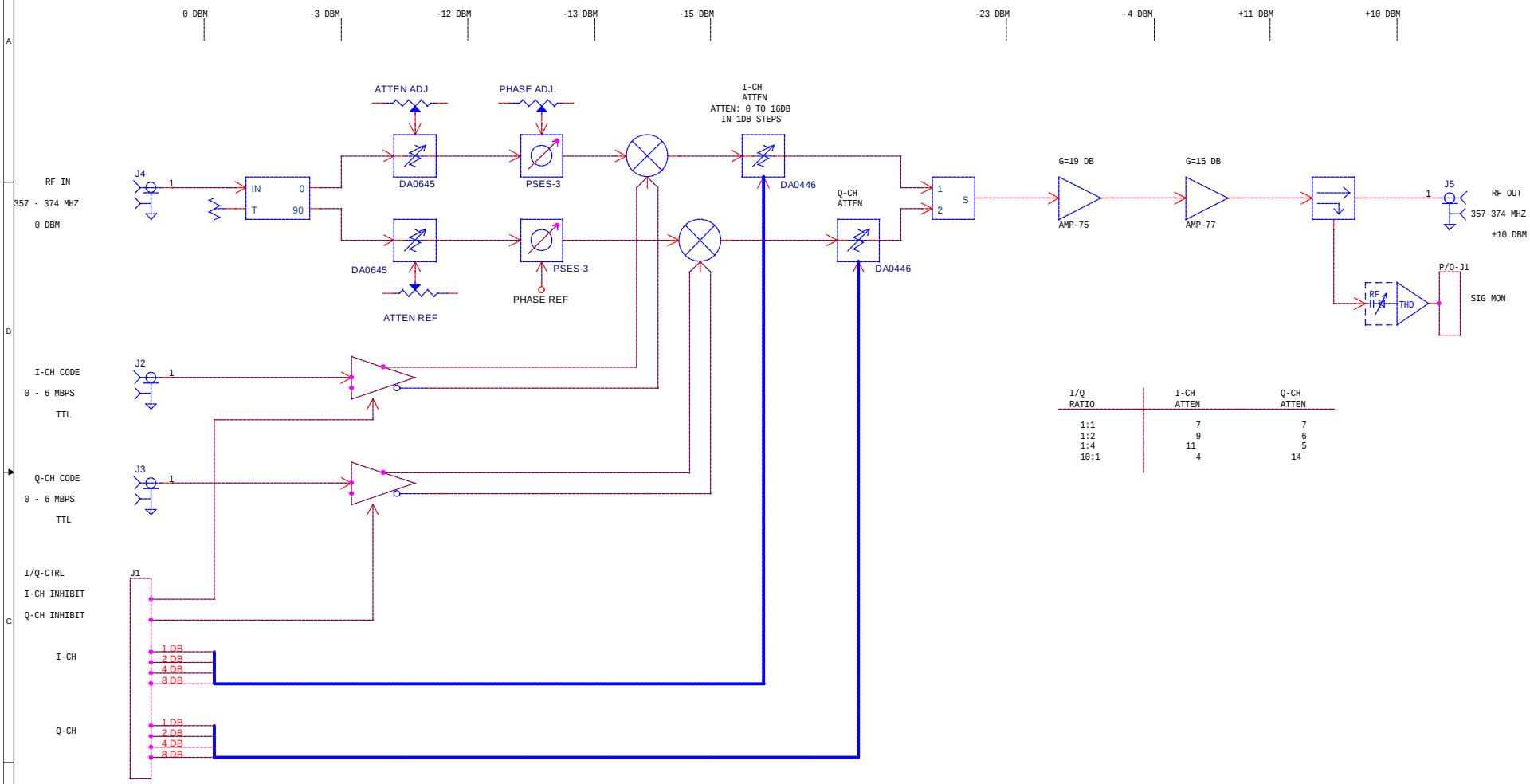

I/Q RATIO	I-CH ATTEN	Q-CH ATTEN
1:1	7	7
1:2	9	6
1:4	11	5
10:1	4	14

NASA/GSFC - CODE 531.2

Title
A1 - QPSK MODULATOR MODULE

Size B | Document Number RFU-A1.DWG | Rev

Date: Thursday, August 15, 1996 | Sheet 0 of 0

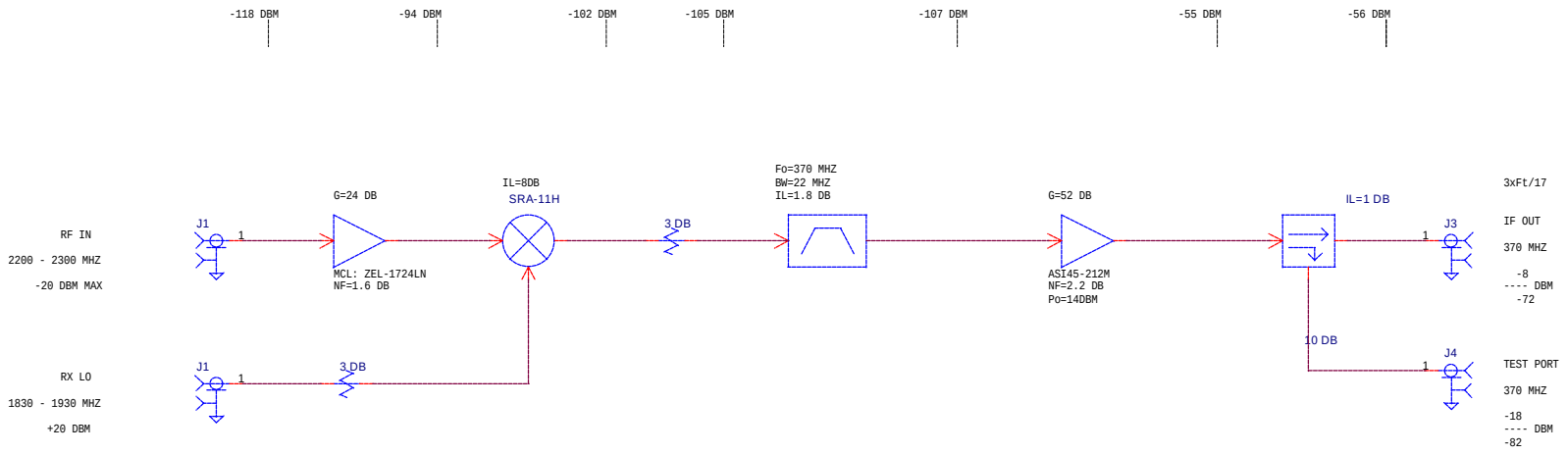

NASA/GSFC - CODE 531.2

Title
A2 - RECEIVER DOWN CONVERTER MODULE

Size	Document Number	Rev
B	RFU-A2.DWG	1

Date: Thursday, August 15, 1996 Sheet 0 of 0

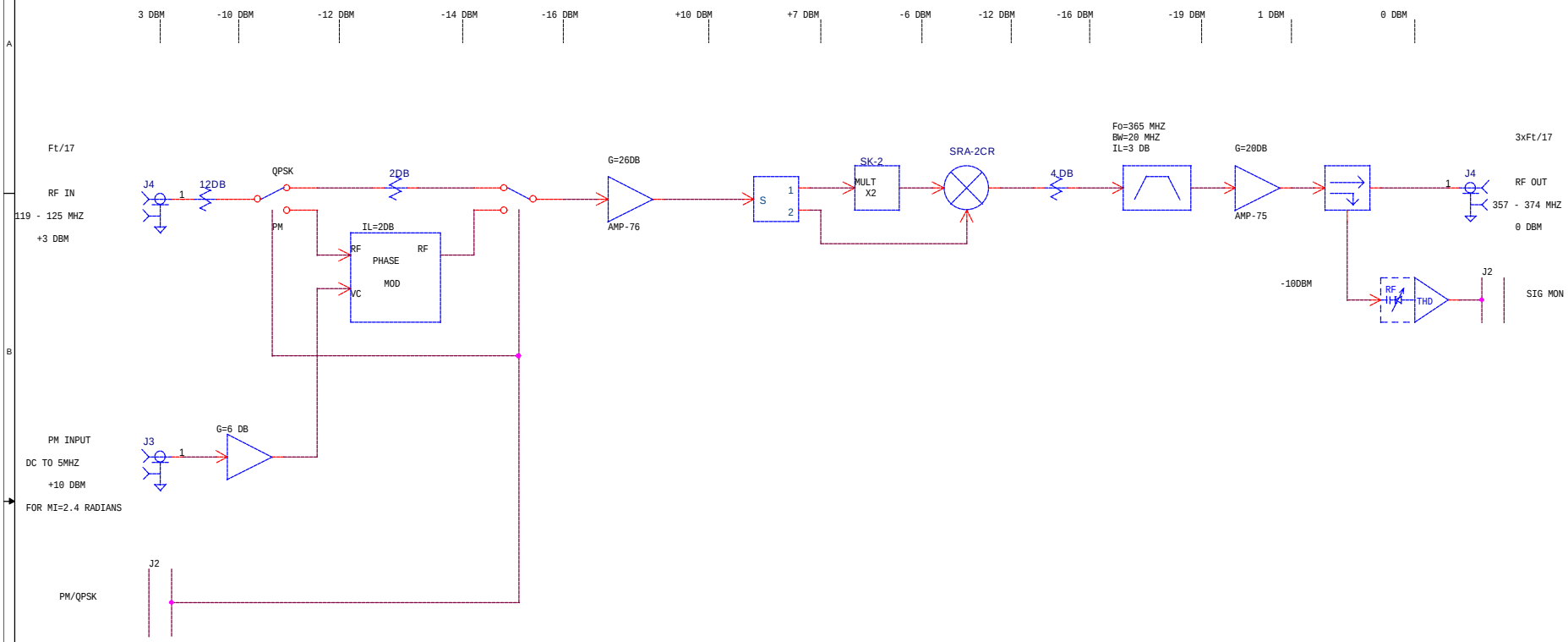

NASA/GSFC - CODE 531.2		
Title: A3 - PM & X3 FREQUENCY MULTIPLIER		
Size: B	Document Number: RFU-A3.DWG	Rev: 1
Date: Thursday, August 15, 1996	Sheet 0 of 0	

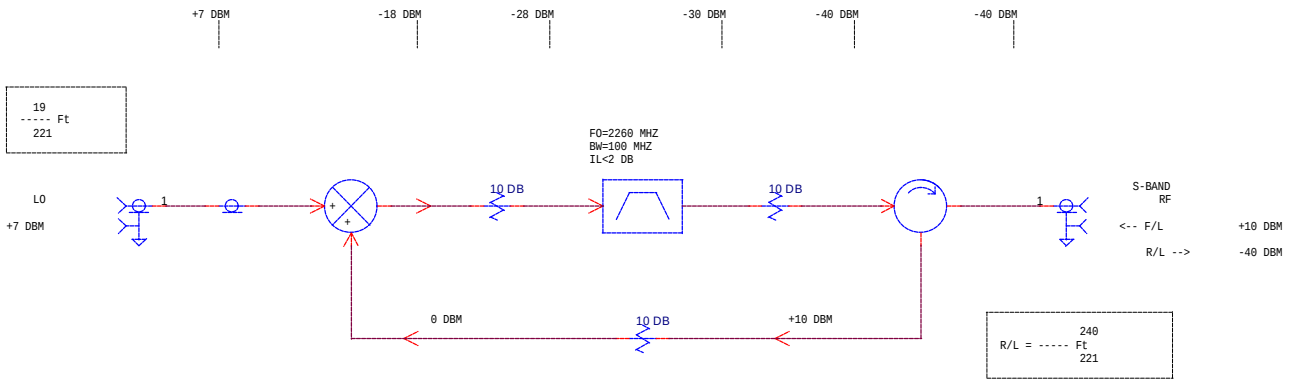

NASA/GSFC - CODE 531.2

Title
A4 - 240/221 Ft FREQ TRANSLATOR MODULE

Size	Document Number	Rev
B	RFU-A4.DWG	1

Date: Thursday, August 15, 1996 Sheet 0 of 0

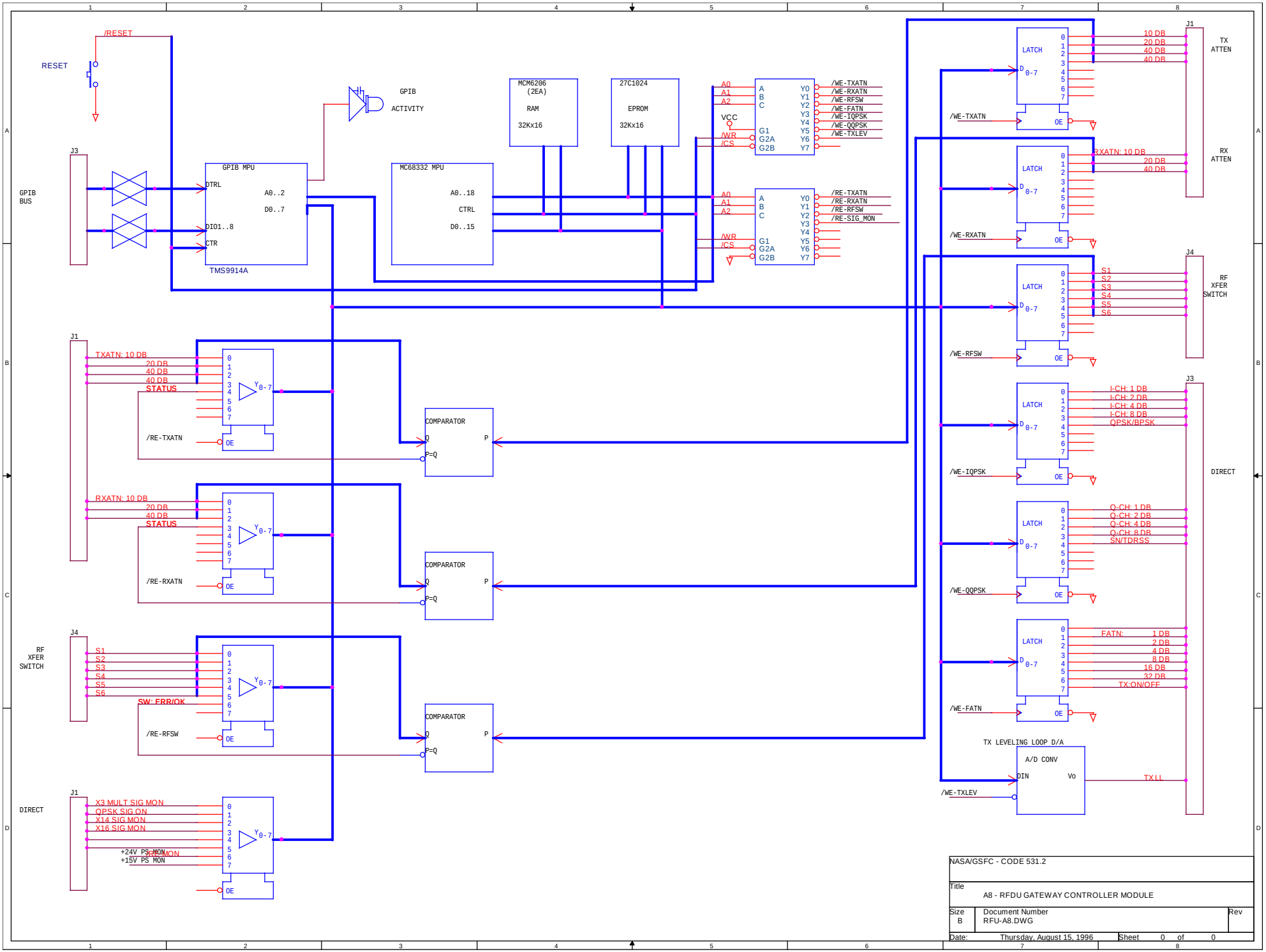
/RESET
RESET
GPIB
ACTIVITY
MCM6206
(2EA)
RAM
32Kx16
27C1024
EPROM
32Kx16
J3
GPIB
BUS
GPIB MPU
DTRL
A0..2
D0..7
DIO1..8
CTR
TMS9914A
MC68332 MPU
A0..18
CTRL
D0..15
A0
A1
A2
VCC
/WR
/CS
A
B
C
G1
G2A
G2B
Y0
Y1
Y2
Y3
Y4
Y5
Y6
Y7
/WE-TXATN
/WE-RXATN
/WE-RFSW
/WE-FATN
/WE-IQPSK
/WE-QQPSK
/WE-TXLEV
/RE-TXATN
/RE-RXATN
/RE-RFSW
/RE-SIG_MON
LATCH
D
0-7
OE
/WE-TXATN
/WE-RXATN
/WE-RFSW
/WE-IQPSK
/WE-QQPSK
/WE-FATN
J1
10 DB
20 DB
40 DB
40 DB
TX
ATTEN
RXATN: 10 DB
20 DB
40 DB
RX
ATTEN
J4
S1
S2
S3
S4
S5
S6
RF
XFER
SWITCH
J3
I-CH: 1 DB
I-CH: 2 DB
I-CH: 4 DB
I-CH: 8 DB
QPSK/BPSK
DIRECT
Q-CH: 1 DB
Q-CH: 2 DB
Q-CH: 4 DB
Q-CH: 8 DB
SN/TDRSS
FATN:
1 DB
2 DB
4 DB
8 DB
16 DB
32 DB
TX:ON/OFF
TX LEVELING LOOP D/A
A/D CONV
DIN
Vo
TXLL
/WE-TXLEV
J1
TXATN: 10 DB
20 DB
40 DB
40 DB
STATUS
/RE-TXATN
RXATN: 10 DB
20 DB
40 DB
STATUS
/RE-RXATN
J4
RF
XFER
SWITCH
S1
S2
S3
S4
S5
S6
SW: ERR/OK
/RE-RFSW
J1
DIRECT
X3 MULT SIG MON
QPSK SIG ON
X14 SIG MON
X16 SIG MON
+24V PS MON
+15V PS MON
Y0-7
OE
COMPARATOR
Q
P
P=Q
NASA/GSFC - CODE 531.2
Title
A8 - RFDU GATEWAY CONTROLLER MODULE
Size
B
Document Number
RFU-A8.DWG
Rev
Date:
Thursday, August 15, 1996
Sheet
0
of
0

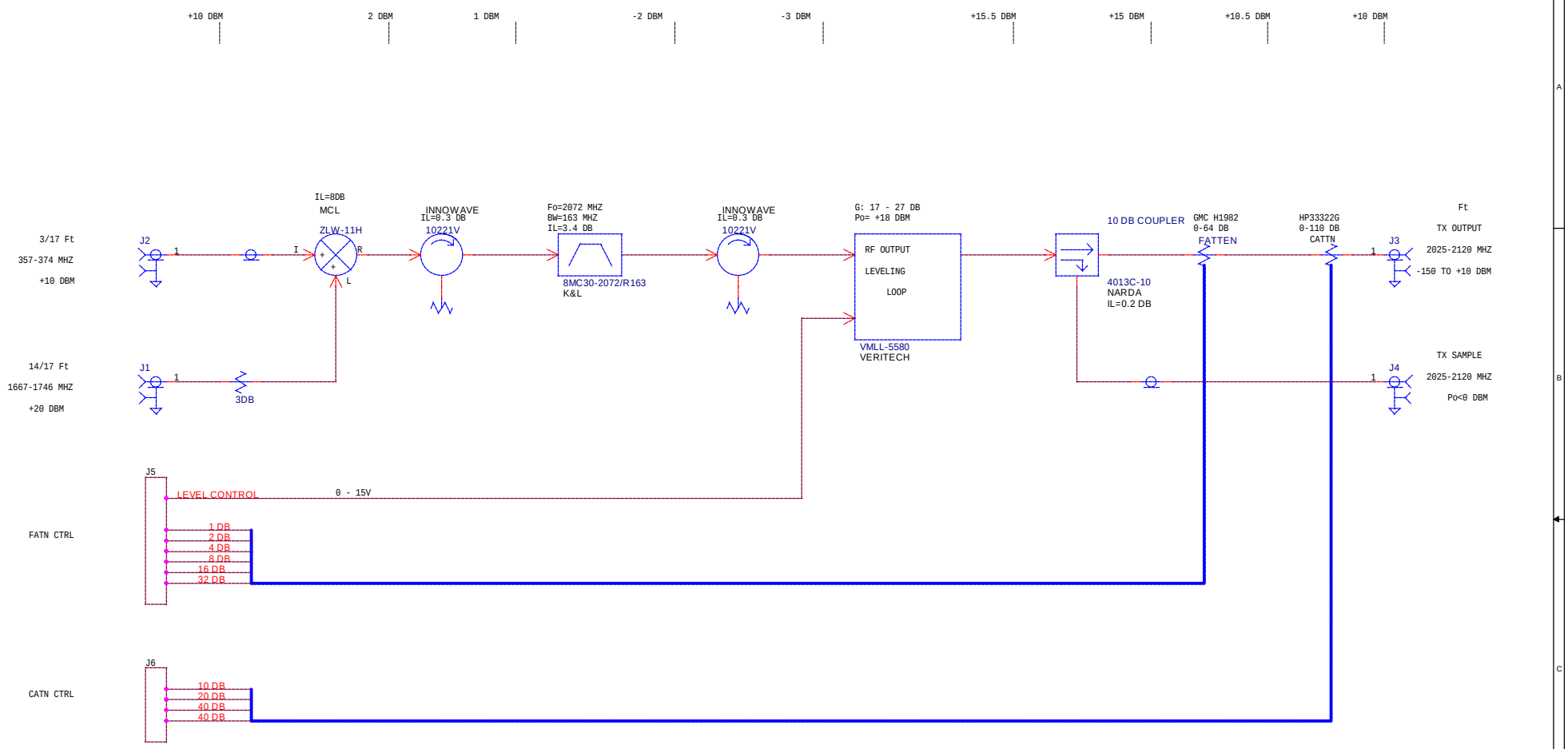

NASA/GSFC - CODE 531.2		
Title: A9 - RF OUTPUT MODULE		
Size: B	Document Number: RFD-A9.DWG	Rev: 1
Date: Thursday, August 15, 1996	Sheet 0 of 0	

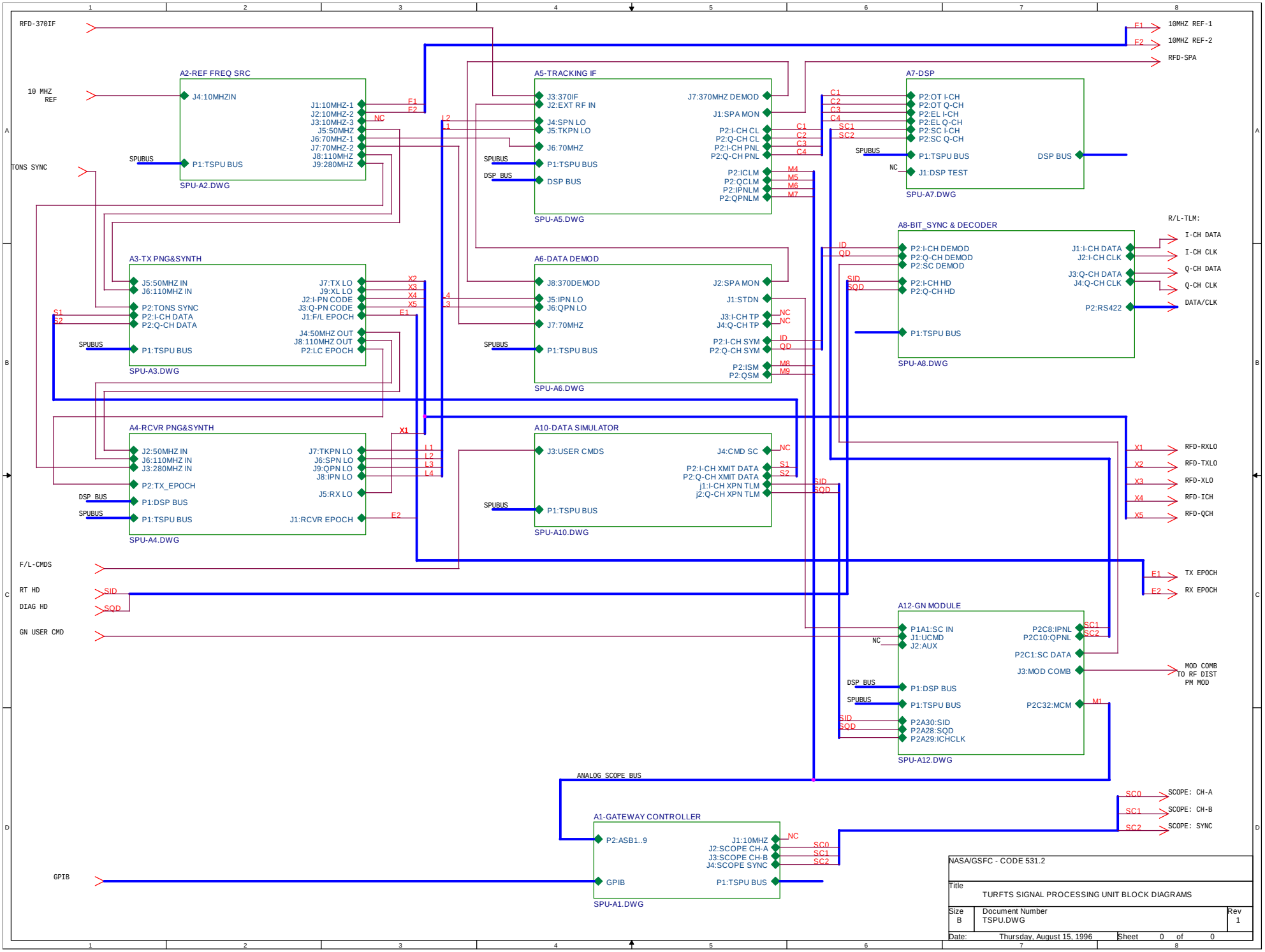
RFD-370IF
10 MHZ REF
TONS SYNC
A2-REF FREQ SRC
J4:10MHZIN
J1:10MHZ-1
J2:10MHZ-2
J3:10MHZ-3
J5:50MHZ
J6:70MHZ-1
J7:70MHZ-2
J8:110MHZ
J9:280MHZ
SPUBUS
P1:TSPU BUS
SPU-A2.DWG
A3-TX PNG&SYNTH
J5:50MHZ IN
J6:110MHZ IN
P2:TONS SYNC
P2:I-CH DATA
P2:Q-CH DATA
P1:TSPU BUS
J7:TX LO
J9:XL LO
J2:I-PN CODE
J3:Q-PN CODE
J1:F/L EPOCH
J4:50MHZ OUT
J8:110MHZ OUT
P2:LC EPOCH
SPU-A3.DWG
A4-RCVR PNG&SYNTH
J2:50MHZ IN
J6:110MHZ IN
J3:280MHZ IN
P2:TX_EPOCH
DSP_BUS
P1:DSP BUS
P1:TSPU BUS
J7:TKPN LO
J6:SPN LO
J9:QPN LO
J8:IPN LO
J5:RX LO
J1:RCVR EPOCH
SPU-A4.DWG
A5-TRACKING IF
J3:370IF
J2:EXT RF IN
J4:SPN LO
J5:TKPN LO
J6:70MHZ
P1:TSPU BUS
DSP BUS
J7:370MHZ DEMOD
J1:SPA MON
P2:I-CH CL
P2:Q-CH CL
P2:I-CH PNL
P2:Q-CH PNL
P2:ICLM
P2:QCLM
P2:IPNLM
P2:QPNLM
SPU-A5.DWG
A6-DATA DEMOD
J8:370DEMOD
J5:IPN LO
J6:QPN LO
J7:70MHZ
P1:TSPU BUS
J2:SPA MON
J1:STDN
J3:I-CH TP
J4:Q-CH TP
P2:I-CH SYM
P2:Q-CH SYM
P2:ISM
P2:QSM
SPU-A6.DWG
A10-DATA SIMULATOR
J3:USER CMDS
P1:TSPU BUS
J4:CMD SC
P2:I-CH XMIT DATA
P2:Q-CH XMIT DATA
j1:I-CH XPN TLM
j2:Q-CH XPN TLM
SPU-A10.DWG
A7-DSP
P2:OT I-CH
P2:OT Q-CH
P2:EL I-CH
P2:EL Q-CH
P2:SC I-CH
P2:SC Q-CH
P1:TSPU BUS
J1:DSP TEST
DSP BUS
SPU-A7.DWG
A8-BIT_SYNC & DECODER
P2:I-CH DEMOD
P2:Q-CH DEMOD
P2:SC DEMOD
P2:I-CH HD
P2:Q-CH HD
P1:TSPU BUS
J1:I-CH DATA
J2:I-CH CLK
J3:Q-CH DATA
J4:Q-CH CLK
P2:RS422
SPU-A8.DWG
R/L-TLM:
I-CH DATA
I-CH CLK
Q-CH DATA
Q-CH CLK
DATA/CLK
10MHZ REF-1
10MHZ REF-2
RFD-SPA
RFD-RXLO
RFD-TXLO
RFD-XLO
RFD-ICH
RFD-QCH
TX EPOCH
RX EPOCH
F/L-CMDS
RT HD
DIAG HD
GN USER CMD
A12-GN MODULE
P1A1:SC IN
J1:UCMD
J2:AUX
P2C8:IPNL
P2C10:QPNL
P2C1:SC DATA
J3:MOD COMB
P1:DSP BUS
P1:TSPU BUS
P2C32:MCM
P2A30:SID
P2A28:SQD
P2A29:ICHCLK
SPU-A12.DWG
MOD COMB
TO RF DIST
PM MOD
ANALOG_SCOPE_BUS
A1-GATEWAY CONTROLLER
P2:ASB1..9
GPIB
J1:10MHZ
J2:SCOPE CH-A
J3:SCOPE CH-B
J4:SCOPE SYNC
P1:TSPU BUS
SPU-A1.DWG
SCOPE: CH-A
SCOPE: CH-B
SCOPE: SYNC
NASA/GSFC - CODE 531.2
Title
TURFTS SIGNAL PROCESSING UNIT BLOCK DIAGRAMS
Size B
Document Number TSPU.DWG
Rev 1
Date: Thursday, August 15, 1996
Sheet 0 of 0

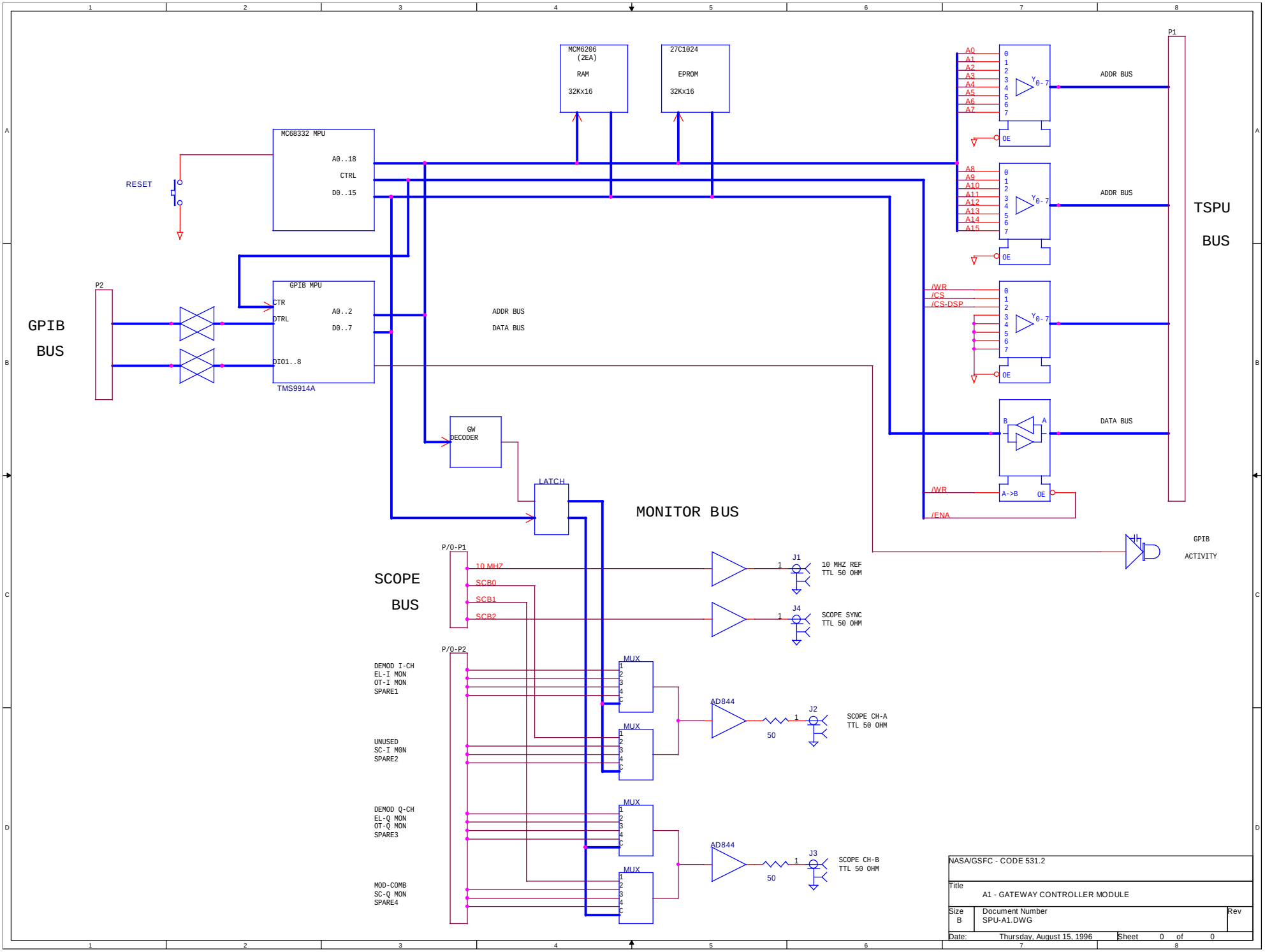

NASA/GSFC - CODE 531.2		
Title: A1 - GATEWAY CONTROLLER MODULE		
Size: B	Document Number: SPU-A1.DWG	Rev
Date: Thursday, August 15, 1996	Sheet 0 of 0	

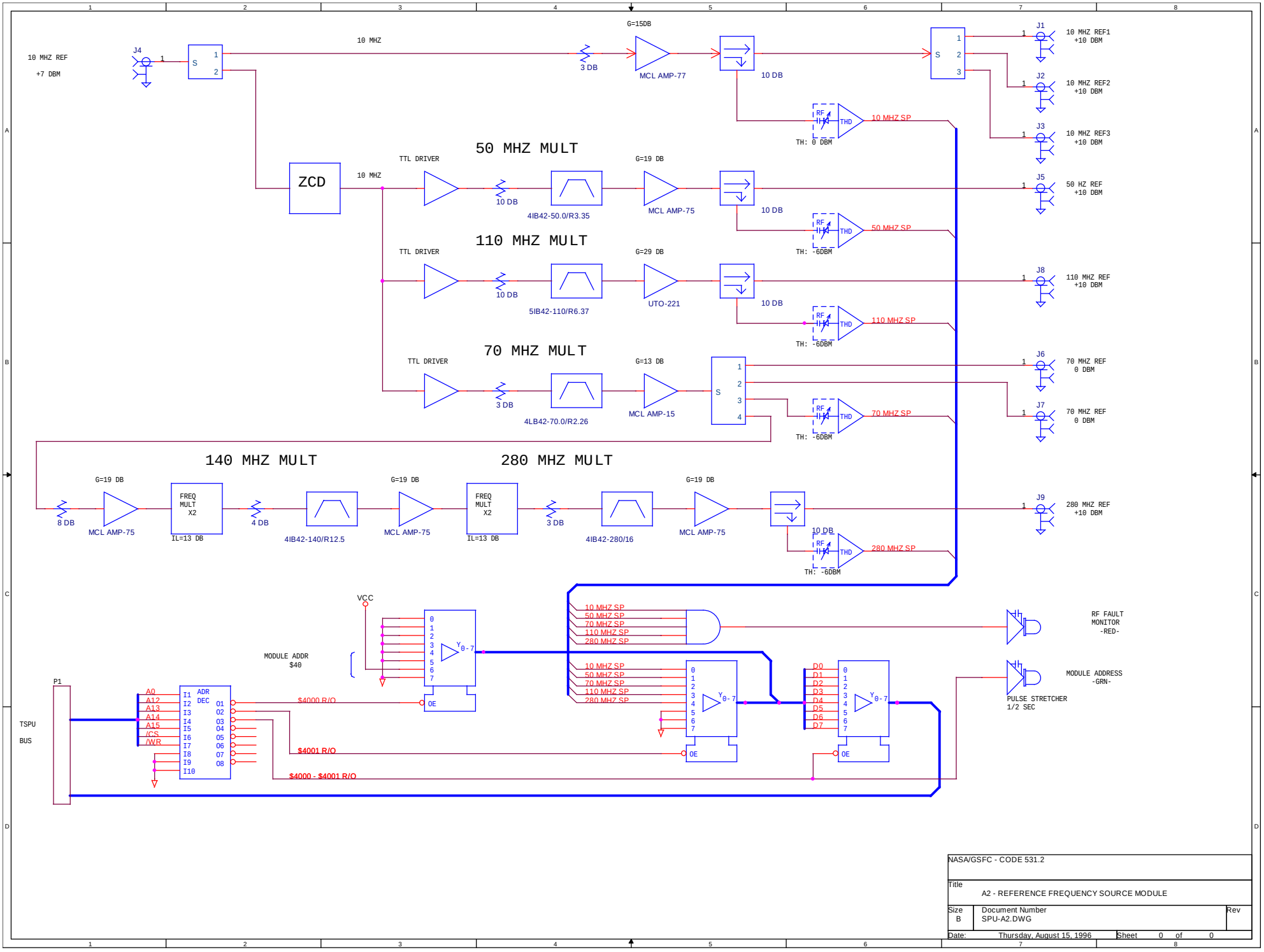

NASA/GSFC - CODE 531.2

Title: A2 - REFERENCE FREQUENCY SOURCE MODULE

Size: B | Document Number: SPU-A2.DWG | Rev

Date: Thursday, August 15, 1996 | Sheet 0 of 0

MODULE A3 - TX SYNTHESIZER

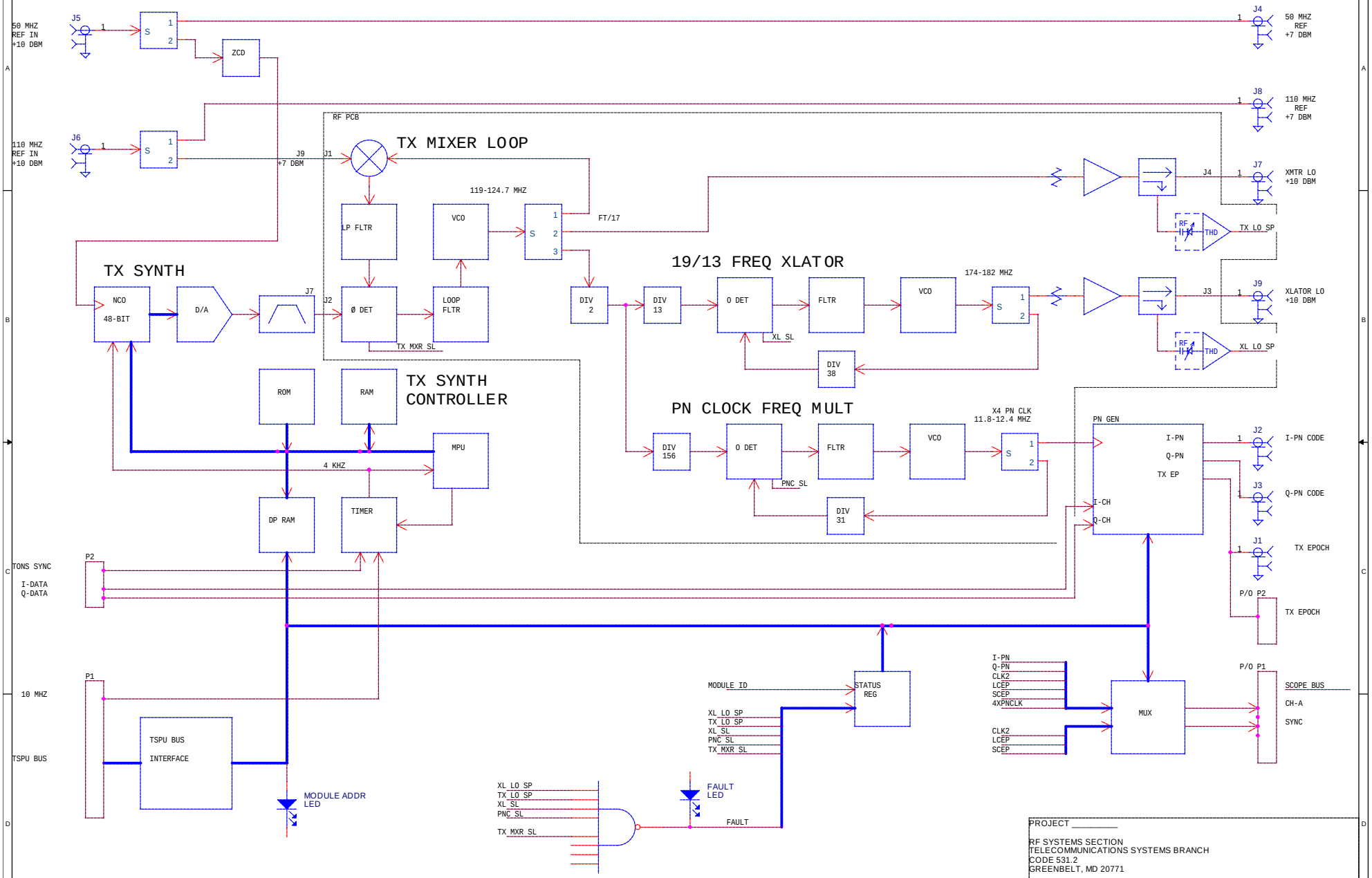

PROJECT _____

RF SYSTEMS SECTION
TELECOMMUNICATIONS SYSTEMS BRANCH
CODE 531.2
GREENBELT, MD 20771

Title: MODULE - A3, TX SYNTHESIZER

Size	Document Number	Rev
B	GSFC-	1.0

Date: Thursday, August 15, 1996 Sheet 0 of 0

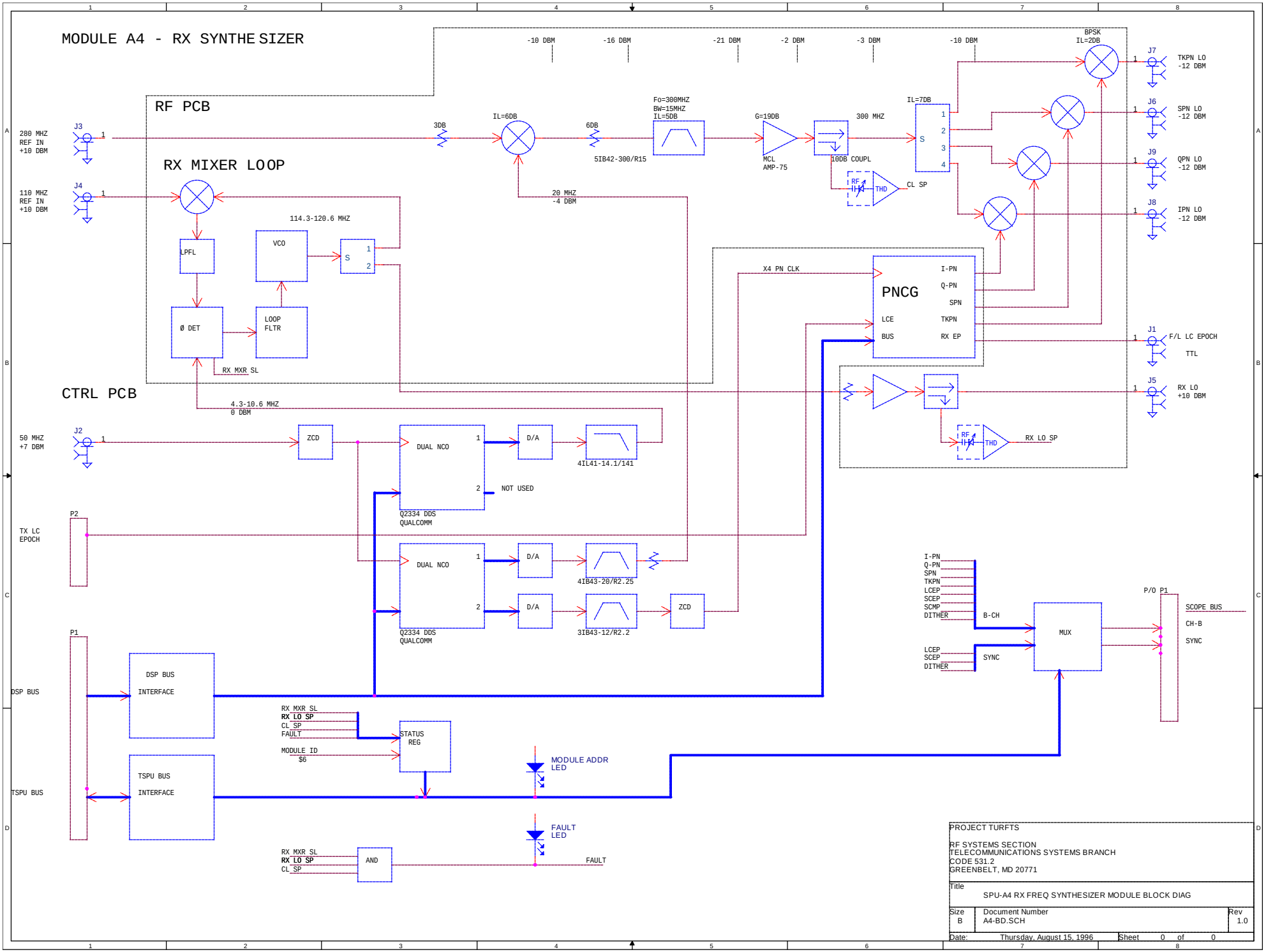

PROJECT TURFTS

RF SYSTEMS SECTION
TELECOMMUNICATIONS SYSTEMS BRANCH
CODE 531.2
GREENBELT, MD 20771

Title: SPU-A4 RX FREQ SYNTHESIZER MODULE BLOCK DIAG

Size	Document Number	Rev
B	A4-BD.SCH	1.0

Date: Thursday, August 15, 1996 Sheet 0 of 0

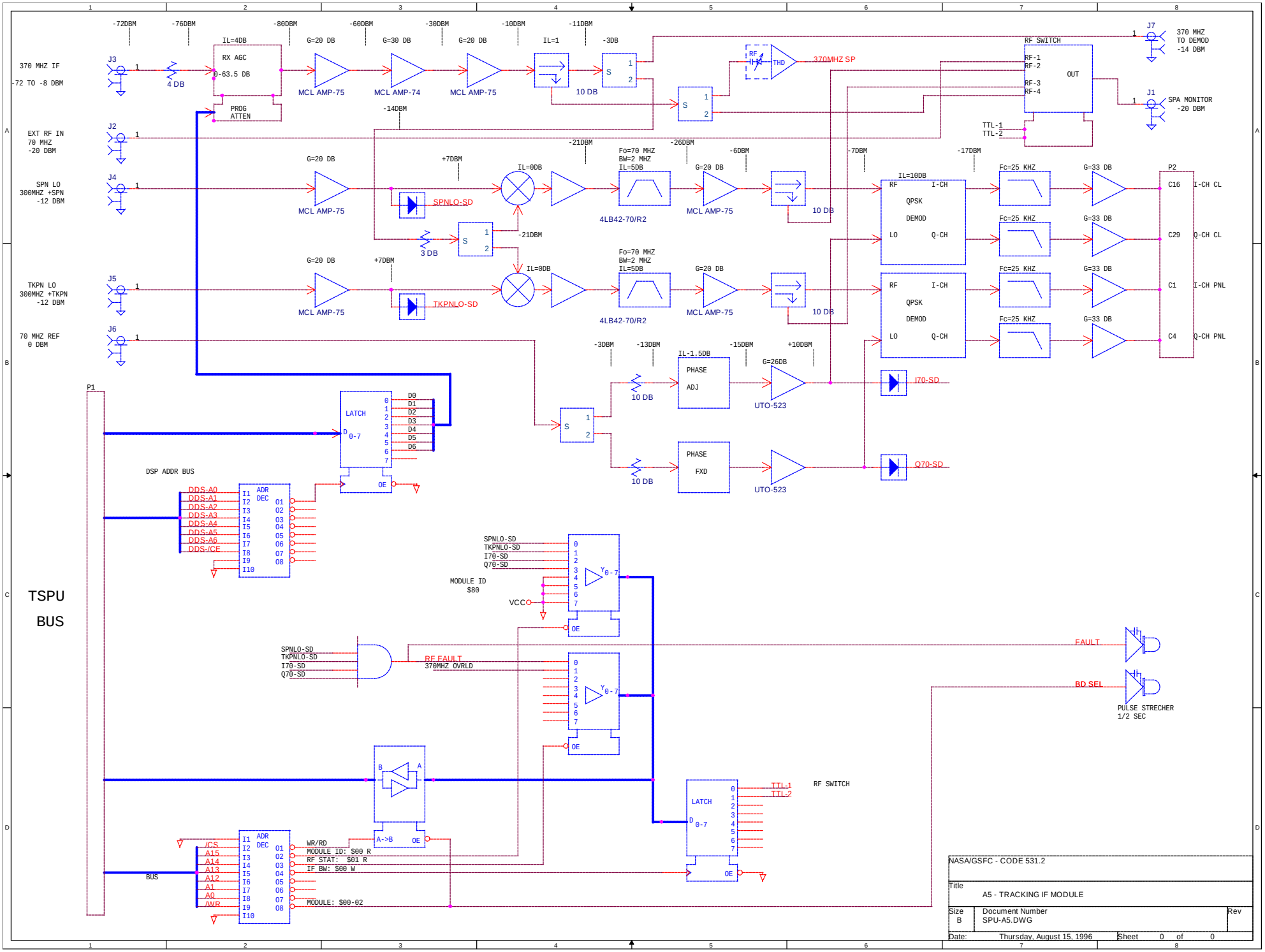

NASA/GSFC - CODE 531.2

Title: A5 - TRACKING IF MODULE

Size: B | Document Number: SPU-A5.DWG | Rev

Date: Thursday, August 15, 1996 | Sheet 0 of 0

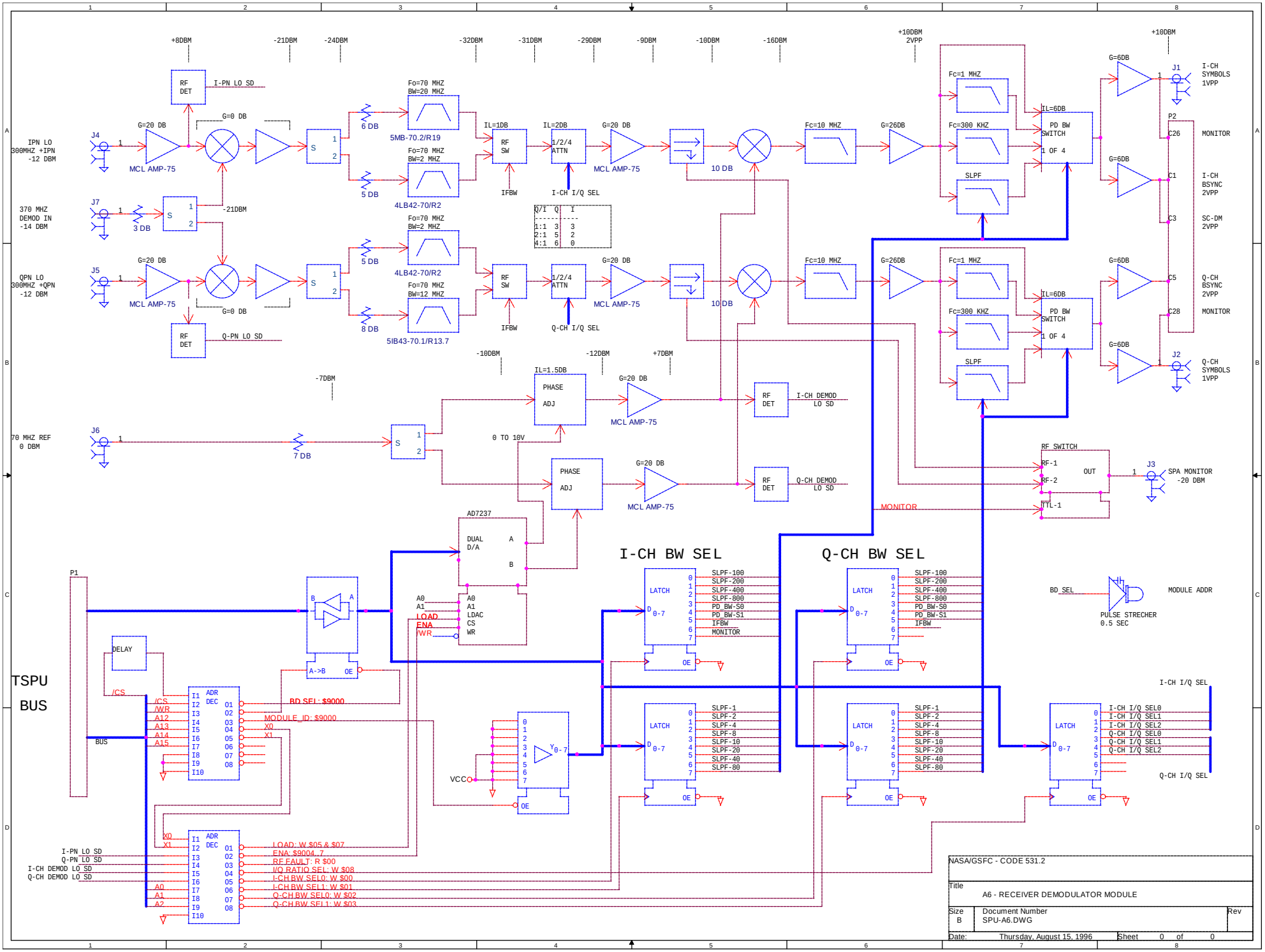
IPN LO 300MHZ +IPN -12 DBM
370 MHZ DEMOD IN -14 DBM
QPN LO 300MHZ +QPN -12 DBM
70 MHZ REF 0 DBM
MCL AMP-75
5MB-70.2/R19
4LB42-70/R2
5IB43-70.1/R13.7
RF SW
1/2/4 ATTN
I-CH I/Q SEL
Q-CH I/Q SEL
PD BW SWITCH
1 OF 4
I-CH SYMBOLS 1VPP
MONITOR
I-CH BSYNC 2VPP
SC-DM 2VPP
Q-CH BSYNC 2VPP
Q-CH SYMBOLS 1VPP
PHASE ADJ
I-CH DEMOD LO SD
Q-CH DEMOD LO SD
RF SWITCH
SPA MONITOR -20 DBM
AD7237
DUAL D/A
I-CH BW SEL
Q-CH BW SEL
LATCH
PULSE STRECHER 0.5 SEC
MODULE ADDR
TSPU BUS
ADR DEC
BD SEL: $9000
MODULE_ID: $9000
LOAD: W $05 & $07
ENA: $9004..7
RF FAULT: R $00
I/Q RATIO SEL: W $08
I-CH BW SEL0: W $00
I-CH BW SEL1: W $01
Q-CH BW SEL0: W $02
Q-CH BW SEL1: W $03
NASA/GSFC - CODE 531.2
Title
A6 - RECEIVER DEMODULATOR MODULE
Size B
Document Number SPU-A6.DWG
Rev
Date: Thursday, August 15, 1996
Sheet 0 of 0

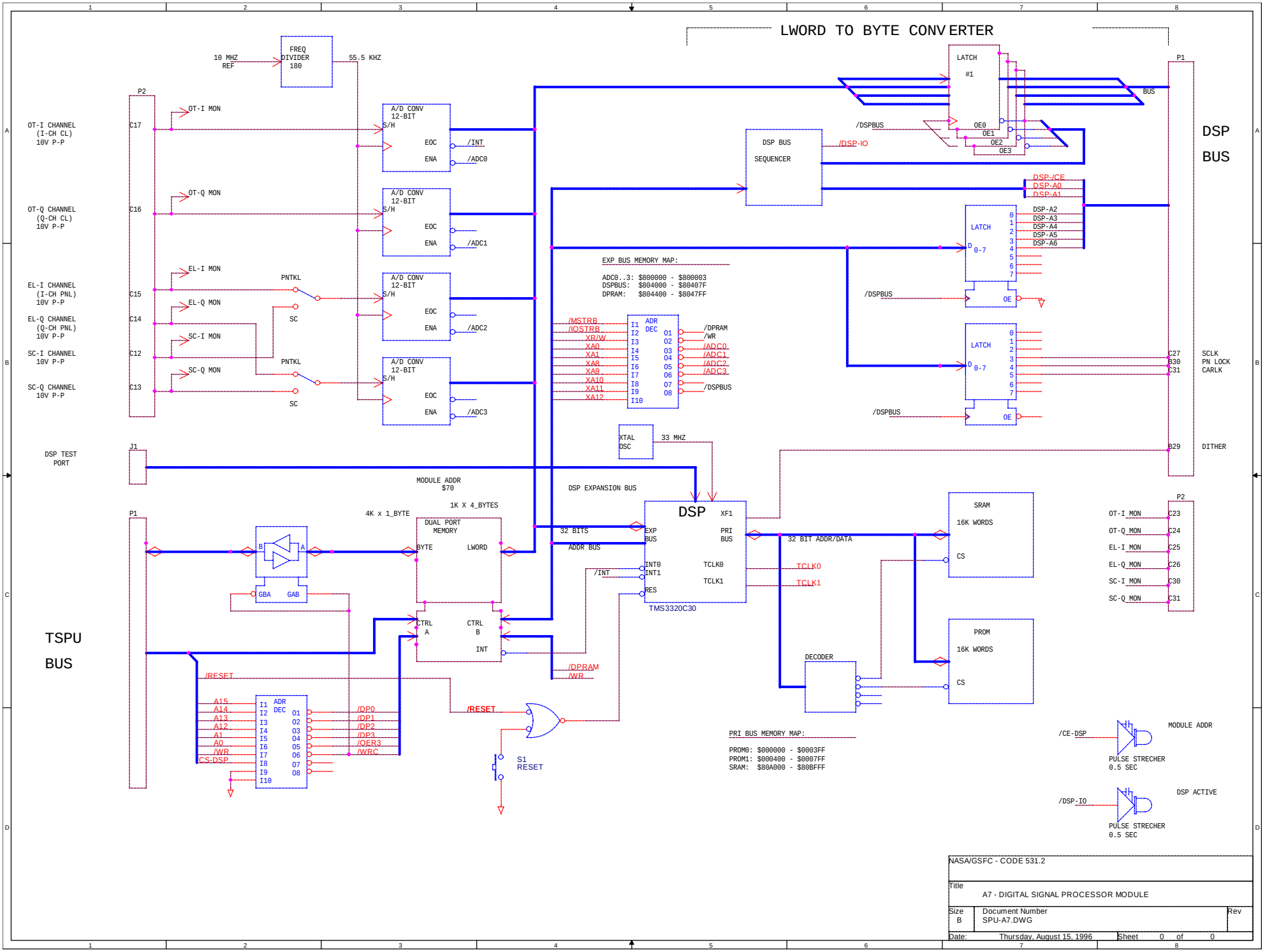
LWORD TO BYTE CONVERTER
10 MHZ REF
FREQ DIVIDER 180
55.5 KHZ
P2
OT-I CHANNEL (I-CH CL) 10V P-P
OT-Q CHANNEL (Q-CH CL) 10V P-P
EL-I CHANNEL (I-CH PNL) 10V P-P
EL-Q CHANNEL (Q-CH PNL) 10V P-P
SC-I CHANNEL 10V P-P
SC-Q CHANNEL 10V P-P
C17
C16
C15
C14
C12
C13
OT-I MON
OT-Q MON
EL-I MON
EL-Q MON
SC-I MON
SC-Q MON
PNTKL
SC
A/D CONV 12-BIT
S/H
EOC
ENA
/INT
/ADC0
/ADC1
/ADC2
/ADC3
LATCH #1
OE0
OE1
OE2
OE3
/DSPBUS
BUS
P1
DSP BUS
DSP BUS SEQUENCER
/DSP-IO
DSP-/CE
DSP-A0
DSP-A1
DSP-A2
DSP-A3
DSP-A4
DSP-A5
DSP-A6
LATCH
D 0-7
OE
EXP BUS MEMORY MAP:
ADC0..3: $800000 - $800003
DSPBUS: $804000 - $80407F
DPRAM: $804400 - $8047FF
/MSTRB
/IOSTRB
XR/W
XA0
XA1
XA8
XA9
XA10
XA11
XA12
ADR DEC
/DPRAM
/WR
/ADC0
/ADC1
/ADC2
/ADC3
/DSPBUS
C27
B30
C31
SCLK
PN LOCK
CARLK
B29
DITHER
XTAL OSC
33 MHZ
DSP TEST PORT
J1
MODULE ADDR $70
DSP EXPANSION BUS
DSP
XF1
EXP BUS
PRI BUS
32 BITS
ADDR BUS
INT0
INT1
RES
TCLK0
TCLK1
TMS3320C30
/INT
4K x 1_BYTE
1K X 4_BYTES
DUAL PORT MEMORY
BYTE
LWORD
B
A
GBA
GAB
CTRL A
CTRL B
INT
/DPRAM
/WR
32 BIT ADDR/DATA
TCLK0
TCLK1
SRAM
16K WORDS
CS
PROM
16K WORDS
DECODER
OT-I MON
OT-Q MON
EL-I MON
EL-Q MON
SC-I MON
SC-Q MON
C23
C24
C25
C26
C30
C31
TSPU BUS
/RESET
A15
A14
A13
A12
A1
A0
/WR
CS-DSP
/DP0
/DP1
/DP2
/DP3
/OER3
/WRC
S1 RESET
PRI BUS MEMORY MAP:
PROM0: $000000 - $0003FF
PROM1: $000400 - $0007FF
SRAM: $80A000 - $80BFFF
/CE-DSP
MODULE ADDR
PULSE STRECHER 0.5 SEC
/DSP-IO
DSP ACTIVE
PULSE STRECHER 0.5 SEC
NASA/GSFC - CODE 531.2
Title
A7 - DIGITAL SIGNAL PROCESSOR MODULE
Size B
Document Number SPU-A7.DWG
Rev
Date: Thursday, August 15, 1996
Sheet 0 of 0

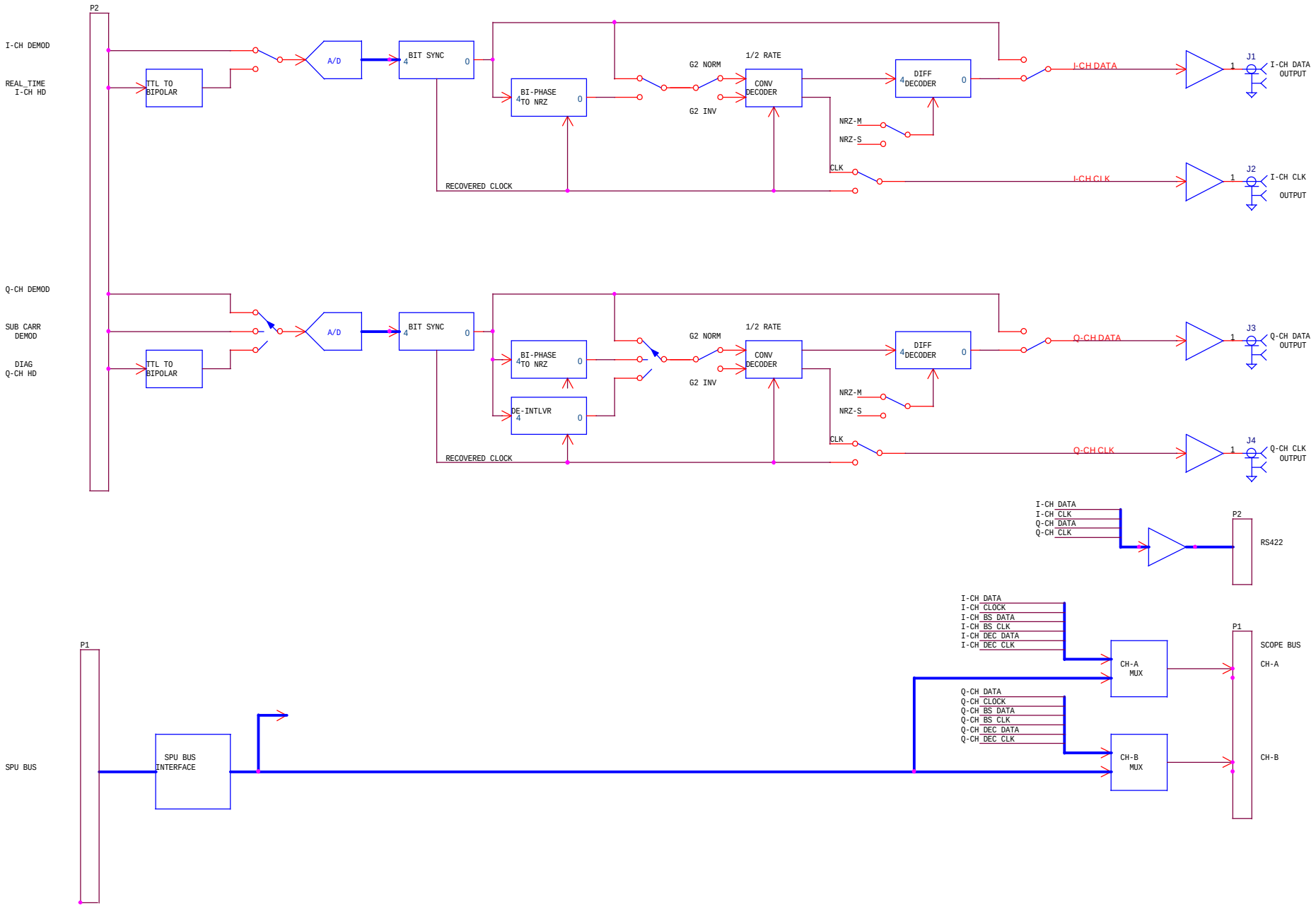

NASA/GSFC - CODE 531.2

Title
A8 - BIT-SYNC & VITERBI DECODER

Size	Document Number	Rev
B	SPU-A8.DWG	

Date: Thursday, August 15, 1996 Sheet 0 of 0

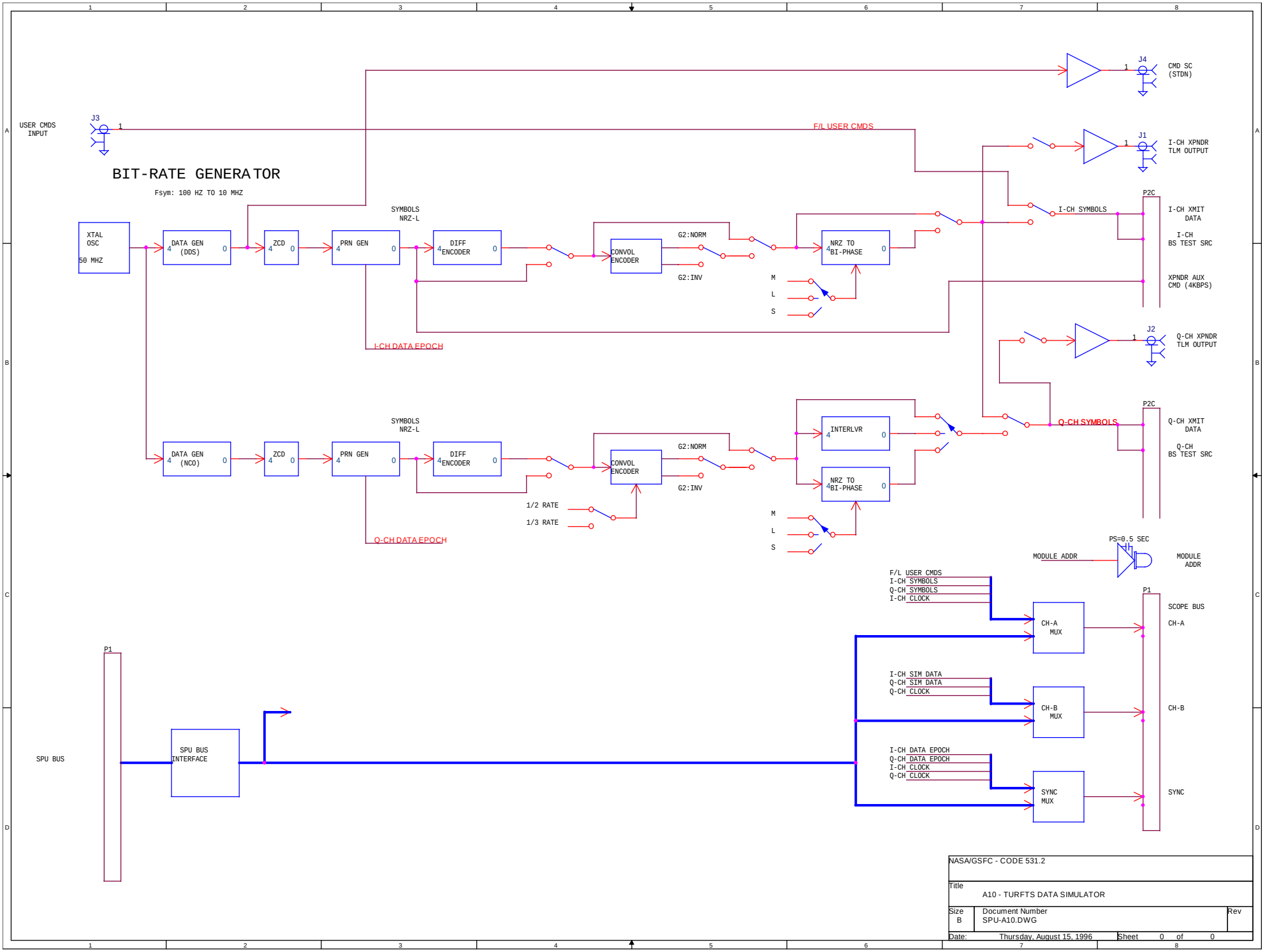

NASA/GSFC - CODE 531.2		
Title: A10 - TURFTS DATA SIMULATOR		
Size: B	Document Number: SPU-A10.DWG	Rev
Date: Thursday, August 15, 1996	Sheet 0 of 0	

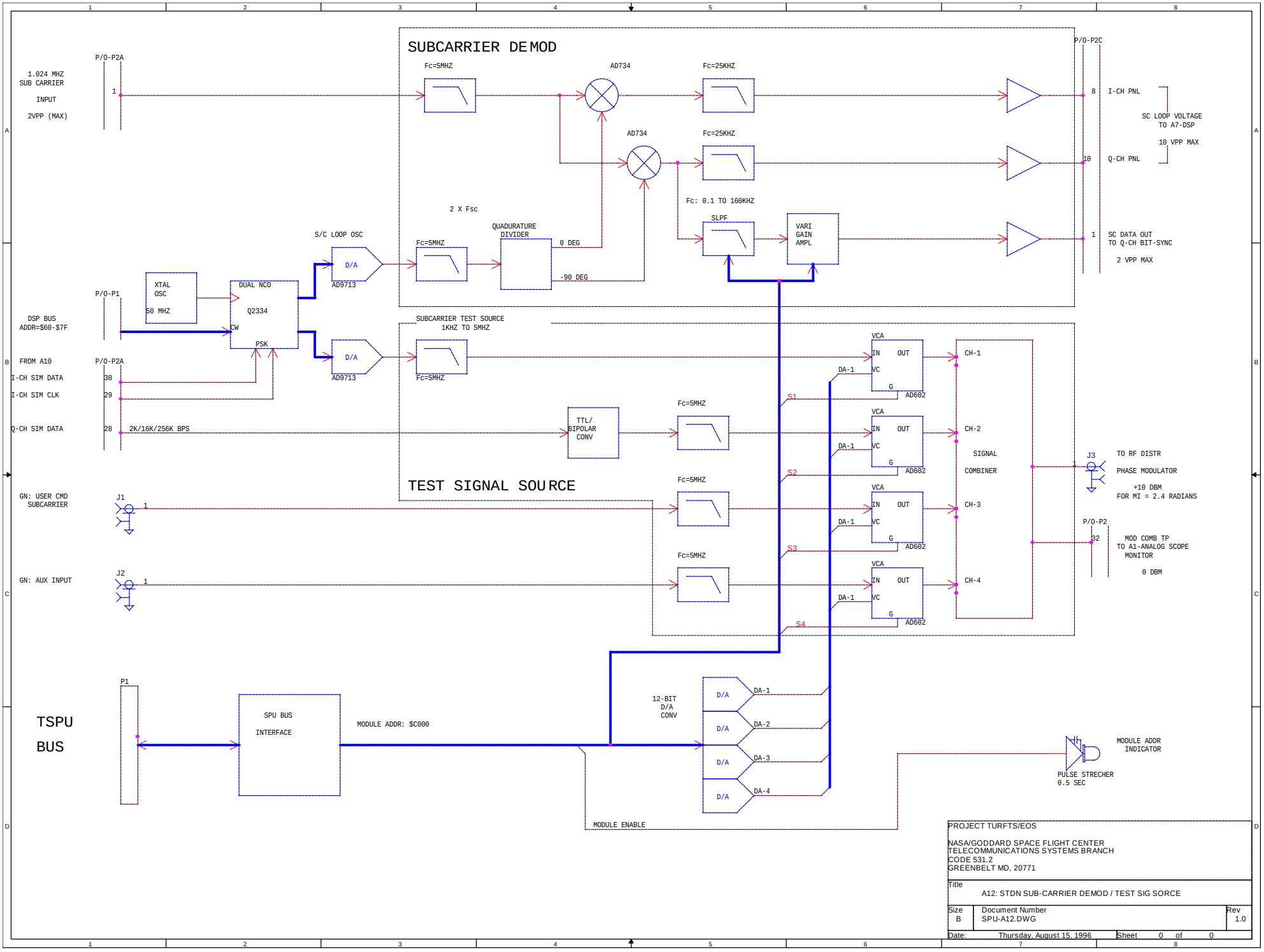

PROJECT TURFTS/EOS

NASA/GODDARD SPACE FLIGHT CENTER
TELECOMMUNICATIONS SYSTEMS BRANCH
CODE 531.2
GREENBELT MD, 20771

Title
A12: STDN SUB-CARRIER DEMOD / TEST SIG SORCE

Size	Document Number	Rev
B	SPU-A12.DWG	1.0

Date: Thursday, August 15, 1996 Sheet 0 of 0